KNAUF CEILING Solutions

DATA SHEET

HERADESIGN® Corridor

- Free-span system complete with all necessary components
- Concealed installation with no visible grid
- No hangers required
- Simple and quick installation
- Each panel is independently demountable for easy access to the void
- Panels can be made in specific lengths to suit the corridor width
- Available in the full HERADESIGN® range of colours
- Available in both A2-s1,d0 and B-s1,d0 2 fire classes

HERADESIGN® Corridor

PRODUCT DATA

Product description

- Ceiling element with a width of 600mm and a maximum length of 2400mm for free-span lay-in installation on perimeter angle. The element consists of a 25mm thick HERADESIGN wood wool tile with two milled grooves on the reverse-side of the long sides. The supporting profiles (DONN DXE 35/70), included in the delivery, are pushed into the grooves on both sides on site. The perimeter profile for this system is a perimeter shadow angle (SRW 42/20/23/24) with a material thickness of 1.5mm.

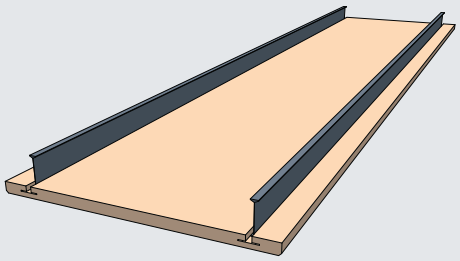

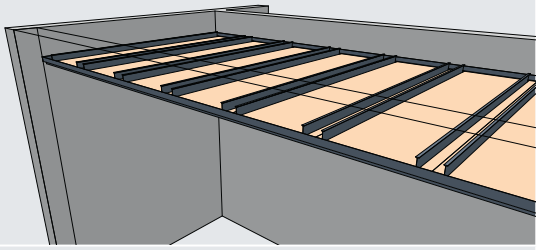

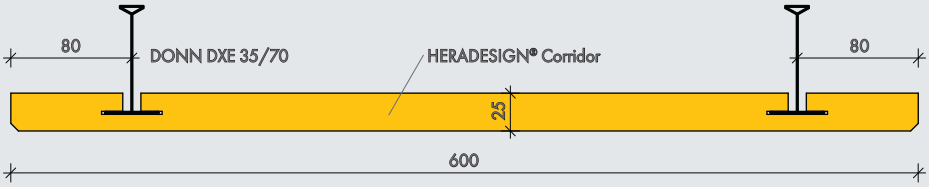

Technical data

Product	Length [mm]	Width [mm]	Tickness [mm]	Weight [kg/m²]
HERADESIGN® Corridor Superfine	max. 2400	600	25	12,60
HERADESIGN® Corridor Fine	max. 2400	600	25	13,30
HERADESIGN® Corridor Superfine A2	max. 2100	600	25	18,00
HERADESIGN® Corridor Fine A2	max. 2100	600	25	19,00

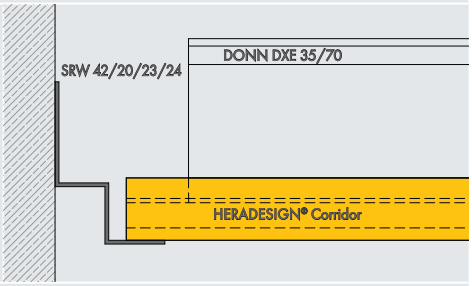

Sound absorption

Surface	Thickness [mm]	TCH* [mm]	Frequency [Hz], α_p 125	250	500	1000	2000	4000	Entire range NRC	α_w	Class
HERADESIGN® Corridor Superfine	25	200	0,35	0,65	0,70	0,55	0,65	0,90	0,60	0,65 (H)	C
HERADESIGN® Corridor Fine	25	200	0,40	0,75	0,65	0,55	0,75	0,85	0,70	0,65 (LH)	C
HERADESIGN® Corridor Superfine A2	25	200	0,35	0,70	0,70	0,50	0,65	0,90	0,65	0,60 (LH)	C
HERADESIGN® Corridor Fine A2	25	200	0,45	0,80	0,65	0,50	0,65	0,90	0,65	0,60 (LH)	C

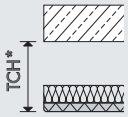

* Total Construction Height

Packaging units

Panels stacked on pallets. Support profiles and perimeter trims are bundled separately on a pallet.

Humidity resistance

Not suitable for outdoor application, indoor swimming pool or spa areas.

Cleanability

Sustainability

Colours

Standard colours

White
Similar to RAL 9010

Beige
Natural tone 13

Vario Design colours

Granite | Steel | Green Marble | Copper | Oak | Brass | Sandstone | Concrete

- Other colours from popular RAL and NCS colour systems are available.
- Deviations in colour and visual appearance may occur due to the rough fibre and panel surface.

HERADESIGN® Corridor

INSTALLATION

1.

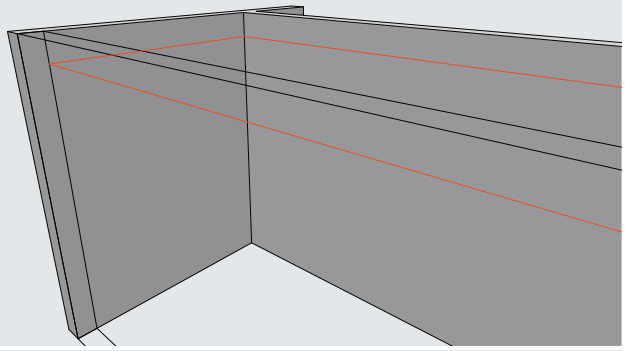

Mark the height on all perimeter walls (upper edge of the perimeter angle).

2.

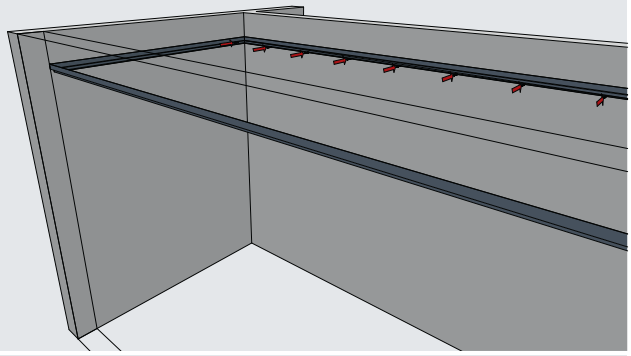

Install the perimeter angle using approved plugs and screws. Maximum spacing of the fixings 400mm. The perimeter angle should be mitred at the corners.

3.

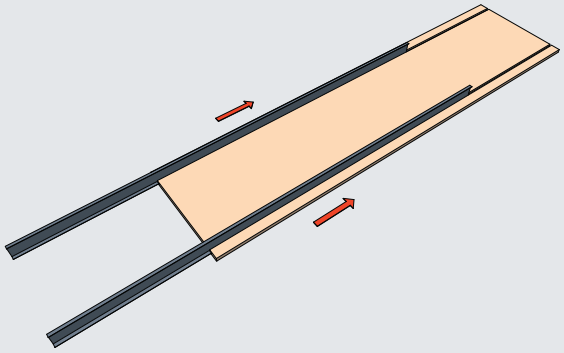

Push the T-profiles into the grooves on the reverse side of the HERADESIGN® Corridor panel. Centre the profiles. Tile overhang 25mm right and left.

4.

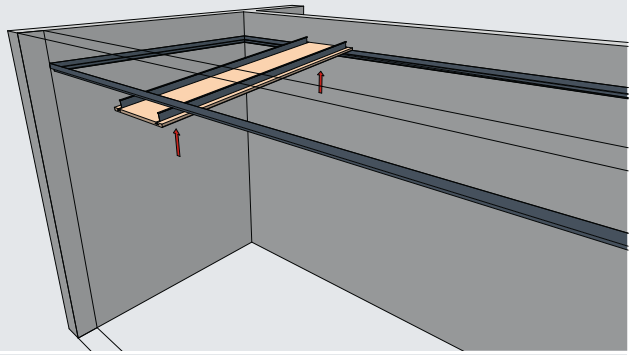

Insert the first tile at the beginning or end of the corridor.

5.

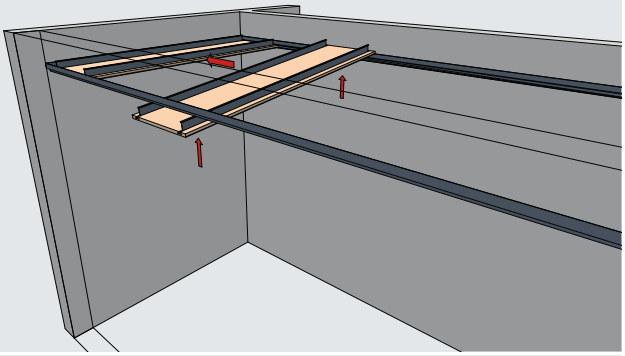

Continue to insert further HERADESIGN® Corridor elements.

6.

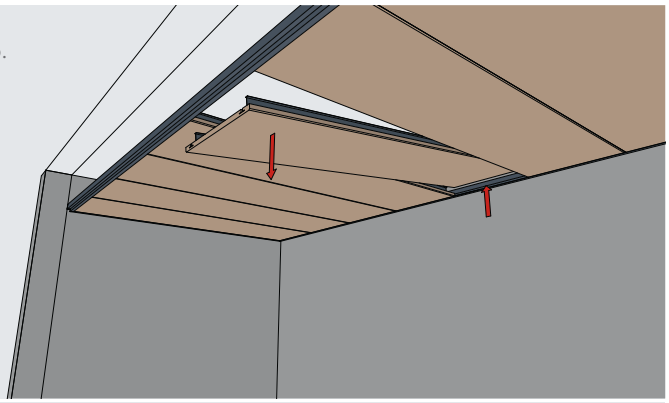

HERADESIGN® Corridor elements are demountable by gently lifting the tile up and moving to the side.

7.

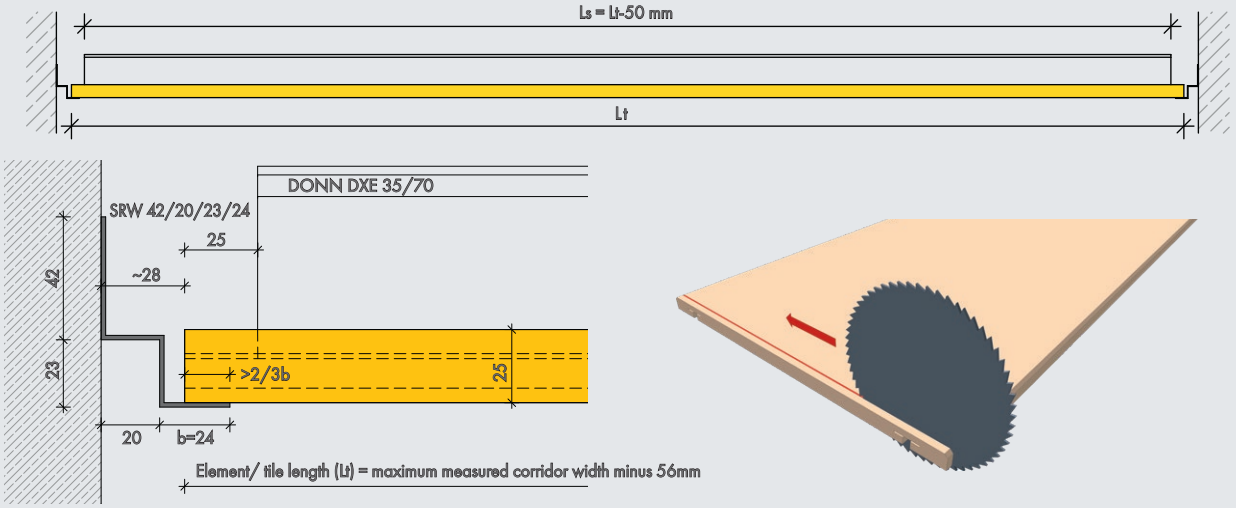

HERADESIGN® Corridor is available to order in every required length up to a maximum tile length (Lt) of 2400mm. To allow for structural tolerances, the main profiles are 25mm shorter than the tile, at both ends. The elements can be shortened by up to 50mm when required. This can be carried out with a hand saw, circular saw or with a table saw.

8.

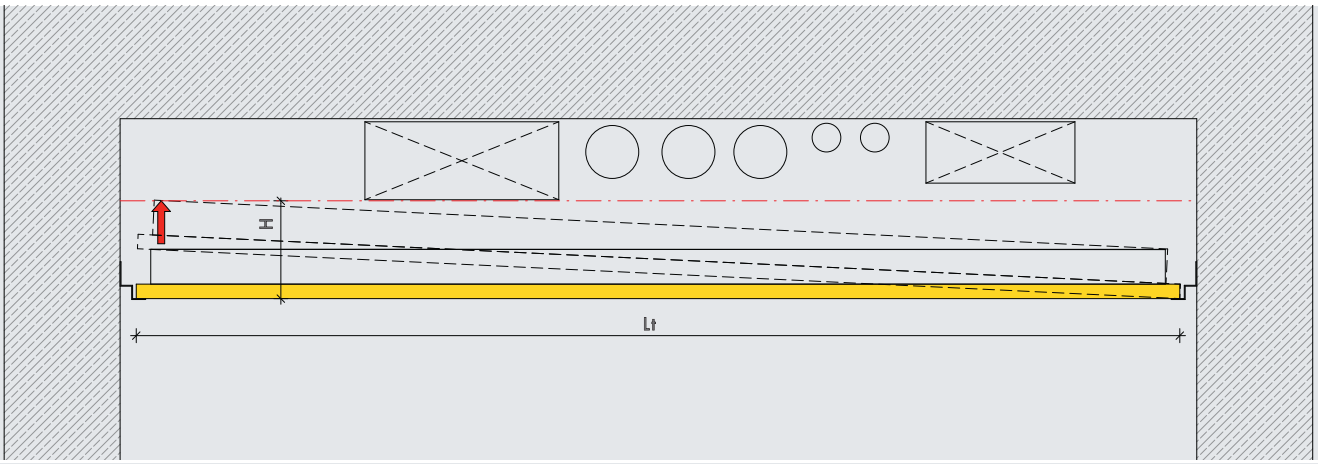

HERADESIGN® Corridor can be installed or demounted by gently lifting the tile and moving it to the side. The minimum installation height (H) is 150mm.

9.

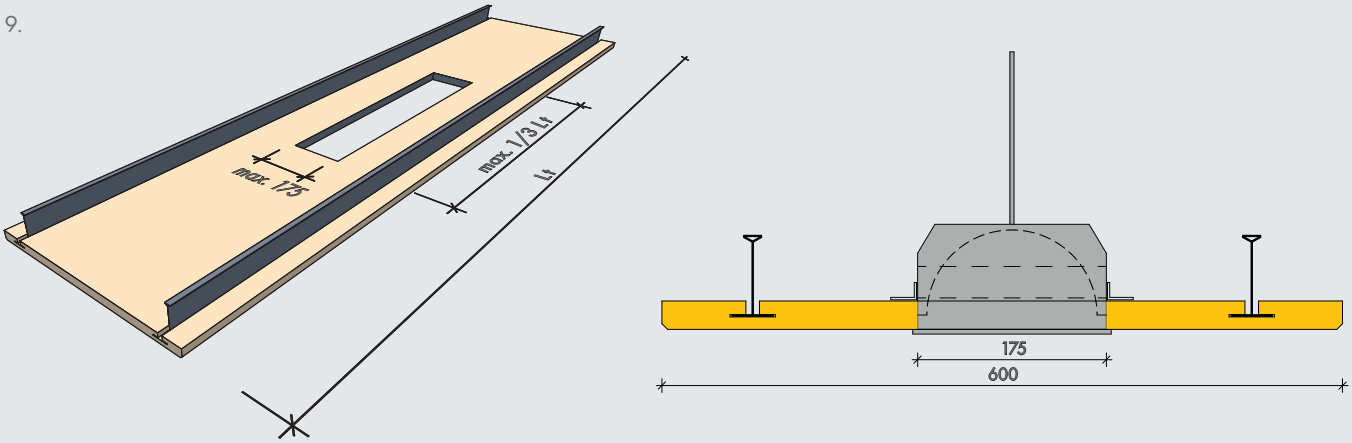

Additional loads >1.5 kg should be fixed to the soffit with independent hangers. For installations such as recessed lighting, loudspeakers etc., the maximum width of the cut-out opening is 175mm. The maximum length of the cut-out opening is one third of the tile length (=1/3 Lt).

Products may vary from country to country. Please contact your local sales representative.
For further information and legal notice, please visit our website.