GENERAL INSTALLATION MANUAL
FOR EGING PV MODULES
亿晶光伏组件安装手册

PLEASE READ THIS MANUAL CAREFULLY BEFORE INSTALLING OR USING THE MODULES.
PLEASE PASS ALONG THE ATTACHED USER MANUAL TO YOUR CUSTOMER.
安装或使用组件前，请仔细阅读本手册。
请将附上的用户手册交给您的客户。

1. INTRODUCTION介绍

☆ Thanks for choosing high quality modules from Changzhou EGing Photovoltaic Technology Co., Ltd (Hereinafter referred to as “EGing”)
非常感谢您选用常州亿晶光电科技有限公司（以下简称“亿晶”）光伏组件。

☆ This Installation Manual contains essential information for the electrical and mechanical installation that you must know before installing EGING PV modules. This also contains safety information youneed to be familiar with.
本安装手册包含了在安装亿晶光伏组件之前您必须知道的机电安装的基本信息。也包含了您需要熟悉的安全信息。

☆ All the information described in this manual are the intellectual property of EGING and based on the technologies and experiences that have been acquired and accumulated in the history of EGING.
本手册中所有的内容均属于亿晶的知识财产，这些财产源于亿晶长期的技术与经验的探索和积累。

☆ This document does not constitute a warranty, expressed or implied. EGING does not assume responsibility and expressly disclaims liability for loss, damage, or expense arising out of or in any way connected with installation, operation, use or maintenance of the PV modules. No responsibility is assumed by EGING for any infringement of patents or other rights of third parties that may result from use of PV module.
本文件不具备任何质保书的意义，不论是明示的或暗示的。未规定在组件安装、操作、使用或维护过程中产生或由此引起的或与此有关的损失、组件损坏或者其他费用的赔偿方案。如果由于使用组件造成的侵害专利权或者第三方的权，亿晶公司不承担相关的任何责任。

☆ EGING reserves the right to make changes to the product, specifications or installation manual without prior notice.
亿晶保留在没有预先通知的情况下变更产品说明书和本安装手册的权利。

2. RULES AND REGULATIONS 法规条例

☆ The mechanical and electrical installation of the module should obey local regulations, including electrical law, construction law and electricity connection requirements. These regulations are different in different installation site, such as the installation on the building roof, different installation environment of the power station. Requirements may also differ with the system voltage, the use of AC or DC. For the specific terms, please contact local authority.
组件的机电安装应遵守当地法规，包括电气法、建筑法和电气连接要求。这些规定在不同的安装地点也不同，如屋顶安装与电站安装环境不同。系统电压不同要求也不同，交

流或直流电的使用。有关具体条款，请与地方当局联系。

☆ Before installing the PV module, contact appropriate authorities to determine permit, installation and inspection requirements that should be followed.

在安装光伏组件之前，请与相关部门联系，确定应遵循的许可证、安装和检查要求。

☆ Don't throw away the Modules Waste. Please contact local related departments or authorities.

废弃组件不能随意丢弃，具体处理方法请咨询当地相关部门或者机构。

3. GENERAL INFORMATION 一般信息

3.1 COMPONENTS OF Module 组件组成

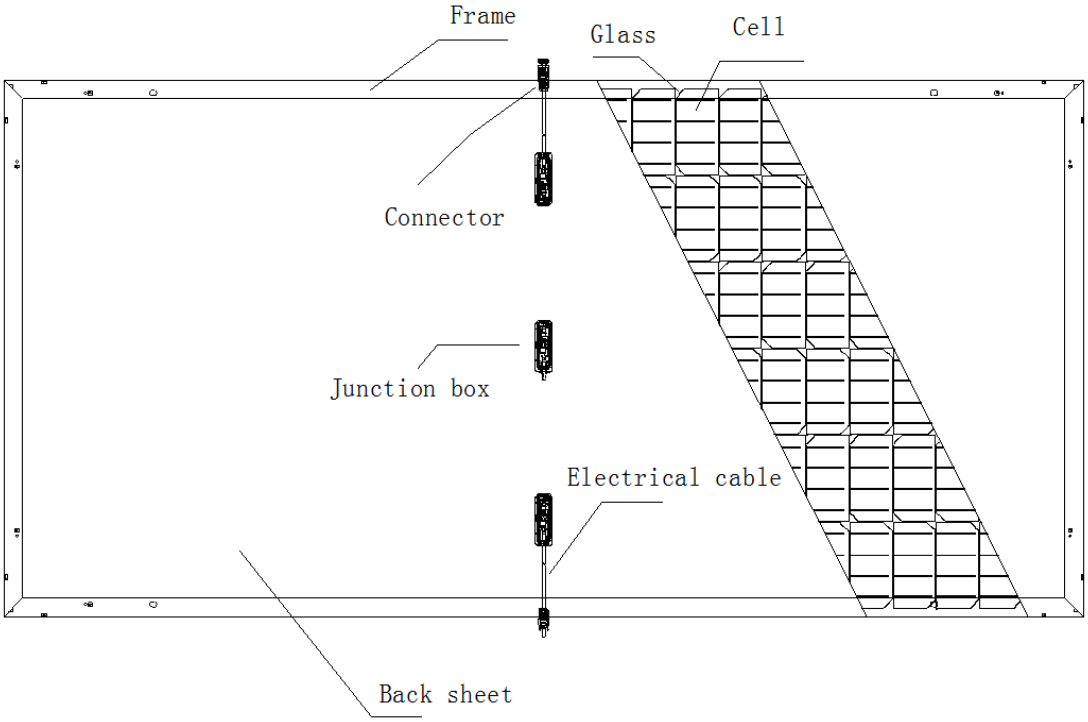

Figure 1 the components of a module

组件的内部组成

3.2 GENERAL SAFETY 常规安全

☆ EGING PV modules are designed in accordance with the international standard IEC61215, IEC61730 and UL1703. The solar modules have been qualified for application class A(equivalent to safety class Ⅱ requirements) .

亿晶的组件设计符合国际 IEC61215、IEC61730 以及 UL1703 等标准，其应用等级为 A 类（满足安全等级 II 的要求）。

☆ Installing PV modules and ground frames should be in accordance with applicable rules and regulations.

安装光伏组件和接地框架应符合适用的规则和条例。

☆ Only installer/service personnel shouldhave access to the PV module installation site.In order to avoid a risk of injury or electrical shock, do not allow anyone to approach the PV module if the person has little knowledge on PV module or on the measures that should be taken when PV modules are damaged.

只有安装人员/服务人员才能进入光伏组件安装现场。为了避免触电或触电的风险，当光伏组件损坏时，不要让任何不了解光伏组件或不知道光伏组件损坏时应采取措施的人，接近光伏组件。

☆ In the case that the PV modules are non-integral type, the module is to be mounted over a fire resistant roof.
在光伏组件为非整体型的情况下，该组件将安装在防火屋顶上。

☆ Follow all safety precautions of other components used in the system.
遵循系统中使用的其他部件的所有安全措施。

☆ Do not clean the glass surface with chemicals. Do not let water stay on the glass surface of PV modules for a long time. This creates a risk of white efflorescence (glass disease) which may result in the deterioration of energy generation.
不要用化学品清洗玻璃表面。不要让水长时间停留在组件的玻璃表面，玻璃长时间浸水有可能出现“发霉”（玻璃的通病），从而导致功率的衰减。

☆ Do not install the PV module horizontally. It may cause dirt or white efflorescence(glass disease) due to water.
不要水平安装光伏组件。它可能会导致污垢或由于积水而“发霉”（玻璃的通病）。

☆ Do not cover the water drain holes of the frame. There is a risk of frost damage when the frame is filled with water.
不要盖住边框的排水孔。当边框内装满水时会有冻坏的风险。

☆ When sliding snow load has to be considered, an appropriate measure has to be taken so that PV module frames on lower edge of PV modules will not be damaged.
考虑到滑行的雪载，必须采取适当措施，使光伏组件的下边缘边框不会受到损坏。

☆ In case the glass surface of a PV module is broken, wear goggles and tape the glass to keep the broken pieces in place.
组件玻璃破损时，请佩戴护目镜并用胶带粘好碎玻璃防止脱落。

3.3 ELECTRICAL SAFETY 电性能安全

☆ The installation of PV modules requires a great degree of skill andshould only be performed by a qualified licensed professional,including licensed contractors and licensed electricians.
组件的安装需要较高的专业技能，只能由有合格执照的专业人员进行操作，包括特许商和注册电气工程师。

☆ Please read this manual carefully before installing or using the modules. Please beaware that there is a serious risk of various types of injury occurringduring the installation including the risk of electric shock.
在安装或使用组件前，请仔细阅读本手册。请注意，在安装过程中会出现各种类型的伤害，包括电击的危险。

☆ All EGINGPV modules are equipped with a permanently attached junctionterminal box that will accept variety of wiring applications or with aspecial cable assembly for ease of installation, and they do not requirespecial assembly.
所有亿晶光伏组件都配备了一个永久连接的接线盒，接线盒将使各种应用或特殊线缆便于连接，不再需要进行特殊的装配。

☆ Contact with electrically active parts of a PV module such as terminals can result in burns, sparks and lethal shock whether the PV modules is connected or not.
不管组件是否连接，接触组件任何带电部位（如接线端子）都可能会造成烧伤、火花或是致命的电击

☆ PV modules produce electricity when the sunlight or other sources illuminate the module surface. When the modules are connected in series, voltage is cumulative. When the modules are connected in parallel, current is cumulative. As a result, a large-scale PV system can produce high voltage and current which could present an increased hazard and may cause serious injury or death.

当阳光或者其他光源照射组件表面时，组件会产生电能。组件串联时，电压累加；组件并联时，电流累加。因此，大规模的光伏系统能产生很高的电压和电流，这可能会增加危险，并可能造成严重的伤害或死亡。

☆ Do not connect the PV modules directly to the loads since the variation of the output power depending on the solar irradiation causes damage for the connected load.
不建议将组件直接连接到负载上，因为取决于阳光辐照度的输出功率的变化有可能对所连接的负载造成损害

☆ Turn off inverters and circuit breakers immediately, should a problem occur.
出现问题时，立即关闭逆变器和断路器

☆ A defective PV module may generate power even if it is removed from the system. It may be dangerous to handle the PV module while exposed to sunlight. Place a defective PV module in a carton after PV cells are completely shaded.
有缺陷的光伏组件即使从系统中移除也可能产生功率。在阳光照射下处理光伏组件可能是危险的。把光伏电池完全遮盖后，将有缺陷的光伏组件放入纸箱中。

☆ Do not expose PV module to sunlight concentrated with mirrors, lenses or similar means.
不要将光伏组件暴露在有镜子、透镜或类似物体的阳光下

☆ Do not shade portions of the PV module surface from the sunlight for a long time. The shaded cell may become hot (hot spot phenomenon) which results in solder joints peeling off.
在阳光下不要长时间遮挡光伏组件。被遮挡的电池片会变热热（热斑现象），导致焊点脱落。

☆ In case of series connection, the maximum open circuit voltage must not be greater than the specified maximum system voltage. The voltage is proportional to the number of series. In case of parallel connection, please be sure to take proper measure (e.g. fuse for protection of module and cable from over current, and/or blocking diode for prevention of unbalanced strings voltage) to block the reverse current flow. The current may easily flow in a reverse direction.
组件串联连接时，最大开路电压必须小于指定的系统最大电压。最大开路电压与串联的组件数成比例。在组件并联连接的情况下，请一定要采取适当的措施（例如，用于组件及其线缆过电流保护的保险丝，和/或用于预防串间电压不均衡的防反二极管），阻止反向电流。电流可能很容易流向相反的方向。

3.4 INSTALLATION SAFETY 安装安全

☆ During transportation or storage, unless you reach the installation site, otherwise, do not open the package of the modules.
组件在运输或存储过程中，不要打开组件的包装，除非到达安装地点。

☆ Please protect the modules' package. When loading or unloading the modules, please handle with care. Do not drop the packed pallet of modules down directly.
请保护好组件的包装。在装卸组件时请稳拿轻放。严禁让组件直接跌落

☆ Before open the modules' package, store the modules in ventilated and dry place.
在组件开箱前，请把组件存储在阴冷和干燥的地方。

☆ When opening the modules' package with knife, be careful not scratching the module.
组件拆包时，请注意刀具的使用，以防划伤组件。

☆ Do not lift the whole module by grabbing the terminal box or cable in any sense.
在任何情况下都严禁通过抓住接线盒或导线的方式来移动整块组件。

☆ Modules are heavy. Handle with care. Do not drop PV modules far above ground. Do not drop one module down on another module.
组件很重。小心轻放。不要将把光伏组件掉落到地上。不要将一个组件掉落在另一个组件上。

☆ Do not stand or step on the module. Do not pass by stepping on the module especially when

installing, maintain and washing the modules.
不要站在或踩在组件上。特别是在安装、维护和清洗组件时，不要踩到组件。

☆ Do not hit or put excessive load on the glass or back sheet. Do not allow objects fall down on the module.
不要在玻璃或背板上撞击或加载过多的负荷。不要让物体掉落在组件上。

☆ Do not cause an excessive load on the surface of PV module or twist the frame.
不要在光伏组件的表面造成过大的负荷或扭曲边框

☆ Do not scratch or hit at the back sheet. Do not hit on the terminal box or do not pull the cables. Please notice the ground condition when the module is placed horizontally with back sheet faced down.
不要划伤或撞伤背膜。不要撞击接线盒，也不要拉接线盒线缆。当组件背膜面朝下水平放置时，请注意地面情况。

☆ Do not try to unpick the module, remove any parts or the nameplate of the module.
不要拆卸组件、移除铭牌或任何部件。

☆ Do not brush oil paint or any other adhesive on the surface of the module. Do not scratch the insulation coating of the frame (except for grounding connection). It may cause corrosion of the frame or compromise the framework strength.
请勿在组件的表面刷油漆或其他任何材料的粘胶剂。不要划伤边框的绝缘涂层（接地连接除外）。它可能导致边框的腐蚀或损害框架的强度。

☆ Do not drill holes in the frame. It may compromise the frame strength and cause corrosion of the frame.
不要在边框上钻孔。它可能危及边框的强度并导致边框的腐蚀。不要做任何改变组件原有结构的操作，经过另外加工的组件将不在质保范围内。

☆ Do not repair glass, back sheet or other broken part of the module.
不要修复玻璃、背板或组件其他破损的部件。

☆ Please install with dry tools in dry condition. Do not operate when the module is wet, unless wear proper equipment against electrical shock.
安装时请在干燥的条件下使用干燥的工具。当组件潮湿时不要操作，除非穿戴适当的装备以防电击。

☆ Do not grab the PV module at only one side, the frame may bend. Grab the PV module at two sides facing each other.
不要只抓住光伏组件的一侧，边框可能弯曲。请抓取组件相对的两条边框。

☆ Do not touch the PV module with bare hands. The frame of PV module has sharp edges and may cause injury.
不要裸手触摸光伏组件。光伏组件的边框边缘锋利，可能造成伤害。

☆ Do not scratch the output cable or bend it with force. The insulation of output cable can break and may result in electricity leakage or shock.
不要划伤输出电缆或用力弯曲。输出电缆的绝缘断裂，可能导致漏电或触电。

☆ Do not try artificially to concentrate sunlight on the PV module.Never touch terminal box or the end of output cables with bare hands when the PV module is irradiated. Cover the surface of PV module with cloth or other suitable sufficiently opaque material to isolate the PV module from incident light and handle the wires with rubber-gloved hands to avoid electric shock.
不要试图人为地将光线聚集在组件上。当光伏组件被照射时，绝不要裸手触摸终端盒或输出线缆的末端。在光伏组件表面盖上布或其他合适的足够不透明材料，使光伏组件从入射光中隔离，戴着橡胶手套处理线缆，避免触电。

☆ Always wear protective head gear, insulating gloves and safety shoes (with rubber soles).

始终穿戴防护头部的装备、绝缘手套和安全鞋（带橡胶底）

☆ Do not touch the PV module unnecessarily during installation. The glass surface and the frames get hot. There is a risk of burn, or you may collapse because of electric shock.
安装期间请勿触摸光伏组件。玻璃表面和边框变得很热。有烧伤的危险，或者你可能因为电击而崩溃。

☆ Do not work under rain, snow or windy conditions.
请勿在雨雪天气或者大风条件下工作。

☆ Do not touch the terminal box and the end of output cables the cable ends (connectors) with bare hands during installation or under sunlight, regardless of whether the PV module is connected to or disconnected from the system.
无论是光伏组件是连接或脱离系统，在安装时或阳光下，都不要裸手触摸终端盒和电缆的末端。

☆ Plug in the connector tight and ensure the wiring work. Do not unplug the connector if the system circuit is connected to a load.
插紧连接器，确保导线通路；在负载工作的情况下，不要直接拔开连接器。

☆ Do not stomp on the glass at work. There is a risk of injury or electric shock if glass is broken.
不要踩在玻璃上工作。如果玻璃破碎，就会有受伤或电击的危险。

☆ Do not work alone (always work as a team of 2 or more people).
不要一个人单独工作（总是在 2 人或以上的团队中工作）。

☆ When installing PV modules far above ground, wear a safety belt, do not drop any object (e.g., PV module or tools).

☆ 当远离地面安装光伏组件时，请佩戴安全带，不要掉落任何物体（如光伏组件或工具）。

☆ Do not wear metallic jewelry which can cause electric shock during installation.
不要佩戴金属首饰，以免在安装过程中触电。

☆ Do not damage the back sheet of PV modules when fastening the PV modules to a support by bolts.
当用螺栓将光伏组件紧固到支架上时，不要损伤光伏组件的背板。

☆ Do not damage the surrounding PV modules or mounting structure when replacing a PV module.
更换组件时，请勿损坏周围的组件和安装结构

☆ Bind cables by the insulation locks. Drooping down of cables from the terminal box could possibly cause various problems such as animal biting, electricity leakage in puddle.
用绝缘锁将线缆捆绑在一起。从接线盒散落下来的线缆可能会导致诸如动物啃咬和在水坑中漏电的各种问题。

☆ Take proper measures for preventing the laminate (consisted of resin, cells, glass, back sheet, etc.) from dropping out of the frame in case the glass is broken.
采取适当措施，防止当玻璃破碎时层压件（含树脂，电池片，背膜等）从边框中脱落。

☆ Cables shall be located so that they will not be exposed to direct sunlight after installation to prevent degradation of cables.
安装之后线缆应该位于不会被阳光直接曝晒的地方，以防止线缆老化。

☆ When installing the module, make sure that the terminal box is on the higher side of the module for better waterproof.
为了更好的防水效果，建议在组件安装时将接线盒端放置在支架上侧。

3.5 Fire SAFETY 防火安全

☆ Consult your local authority for guidelines and requirements for building or structural fire safety .EGING modules have been listed as Class C according to IEC 61730-2 standard.
安装组件前请咨询当地的法律法规，遵守其中关于建筑防火性的要求。根据 IEC 61730-2 标

准，亿晶组件的防火等级为 C 级。

☆ For roof installations, modules should be mounted over a fire resistant covering suitable for this application, with adequate ventilation between the modules backsheet and the mounting surface. In order to maintain the fire class rating,the distance between the Modules frame surface and the roof surface shall be at least 20 cm.
屋顶安装时，屋顶必须要覆盖一层适用于该等级的防火材料，并且保证背膜和安装面的之间的通风。为了保证在屋顶的防火等级，组件和安装表面的最小间隔推荐为 20cm。

☆ Roof constructions and installations may affect the fire safety of building.Improper installation may create hazards in the event of a fire.Please install the Modules with Professional Installers.
屋顶结构和安装方式的不同，会影响建筑的防火安全性能。如果安装不恰当，可能会酿成火灾。请安排专业的安装人员。

4. INSTALLATION CONDITION安装条件

4.1 SITE SELECTION AND WORK ENVIRONMENT安装地点及工作环境

☆ In most applications, the PV modules should be installed in a locationwhere there is no shading throughout the year. Please make sure that there are no obstructions in the surroundings ofthe site of installation.
大多数应用中，光伏组件需安装在全年无阴影的地方。请确保安装现场周围没有障碍物。

☆ EGING recommend that the PV modules should be installed in the place where the operating temperature is from -20℃ to46℃.The operating temperature is the maximum and minimum monthly average temperature of the installation site. The limit of working temperatureis from -40℃ to 85℃.
亿晶推荐光伏组件安装在工作环境温度为-20℃到 46℃的地方，该工作环境温度是安装地点的月平均最高温度和最低温度，组件极限工作环境温度为-40℃~85℃。

☆ EGING PV modules must be mounted on proper structure or any other place which is suitable for module installation(such as ground, roof and facade).
亿晶光伏组件必须安装在适合建筑上或其他适合组件安装的地方（如地面、屋顶和建筑物表面）。

☆ Make sure flammable gases are not generated near the installation site.
确保安装地点附近不产生可燃气体。

☆ The PV modules should not be installed in flooded areas. The junction box should be on the higher side ofthe module when it is mounted.
光伏组件不应安装在水灾地区。亿晶建议接线盒安装时应该在组件的上侧。

☆ Lightning protection is recommended for PV systems that are to be installed in locations with high probability of lightning strikes.
如果组件安装在有频繁雷电活动的地方时，必须对组件进行防雷击保护。

☆ Take proper steps in order to maintain reliabilityand safety, in case the PV modules are used in areas such as: Heavysnow areas / Extremely cold areas / Strong wind areas / Installationsover, or near, water / Areas where installations are prone to salt waterdamage / Small islands or desert areas.
若组件安装在大雪、低温、强风、水面上或近水区域（该区域极易受盐水腐蚀）、海岛、沙漠等区域，需采取适当的措施以保证可靠性和安全性。

☆ EGING suggests that modules should not be installed nor operated in areas where hail, snow, sand, dust, air pollution, soot, etc., are excessive .Modules must not be sited in locations where aggressive substances such as salt, salt mist ,salt-water, chemically active vapors, acid

rain, any other type of corrosive agent, could affect the safely the safely and/or performance of the Modules.

亿晶不建议在冰雹、积雪、风沙、烟尘、空气污染、煤烟等过量的环境中安装和使用。不建议安装在有强烈腐蚀性物质如，盐、盐雾、盐水、活跃的化学蒸汽、酸雨、或者有其他任何会严重腐蚀组件，影响组件安全或者性能物质的地方。

☆ EGING PV modules have also passed salt mist corrosion test according to IEC60701. But corrosion may occur in the module frame connecting to the bracket portion or the portion of ground connection, those parts shall be prepared with anti-corrosion treatment before usage.

亿晶光伏组件已经依据IEC60701通过了盐雾腐蚀试验。但在连接支架部分或接地部分的组件框架内可能发生腐蚀，使用前应对其进行防腐处理。

☆ If you are planning to use the PV modules where the salt water damagemay be possible, please consult with EGING local agent first to determine anappropriate installation method, or to determine whether the installation ispossible.

如果你打算在可能受盐水腐蚀的地方使用的光伏组件，请首先与亿晶的当地代理就合适的安装方法咨询，以确定安装是否可行。

☆ EGING recommends that modules used or installed should be 2000 meters (altitude) at most.

亿晶建议组件在海拔 2000m 以下使用。

4.2 TILT ANGLE倾角

☆ The tilt angle of the PV module is the angle between the PVmodule and a horizontal ground surface. The PV module generates themaximum output power when it faces the sun directly.

光伏组件的倾角是指光伏组件与水平地面之间所成的夹角。当光伏组件与太阳光垂直时，产生最大的输出功率。

☆ In the NorthernHemisphere, the PV modules should typically face south, and in theSouthern Hemisphere, the PV modules should typically face north.

在北半球，组件通常应该朝向南方；而在南半球，组件通常应该朝向北方。

☆ For the detailed installation angle, which is different in different area, may refer to the recommendation of the experienced PV modules installation supplier.

对于详细的安装角度，依据区域的不同而不同，可参考有经验的组件安装商给出的建议。

☆ Modules mounted flat(0° tilt angle) is not suggested due to dust is easy to be accumulated and affect power output. Dust building up on the surface of the modules can impair with modules performance. EGING recommends installing the modules with a tilt angle of at least 9 degrees, making it easier for dust to be washed off by rain and more regular cleaning is not required and water on the surface of module will not be accumulated, avoiding mouldy glass caused to affect the degradation of the modules because of long time water collection on the module surface.

不建议水平安装组件，因为水平安装更容易积累污垢从而影响功率输出，亿晶建议组件安装时的倾角不小于9度，这样组件在下雨时表面灰尘容易被雨水带走，从而减少组件清洗次数，同时利于组件表面的积水流走，避免大量积水长期停留在组件的玻璃表面，玻璃长时间浸水有可能出现“发霉”，从而导致功率的衰减。

5. ELECTRICAL INSTALLATION 电气安装

5.1 WIRINGAND CABLES布线及电缆线

☆ To ensure proper system operation and to maintain your warranty, observe the correct cable connection polarity (Figures 2&3) when connecting the modules to a battery or to other modules. If not connected correctly, the bypass diode could be destroyed.

为了确保系统的正常运行，在将组件连接到电池或者其他组件时，请注意观察电缆线的极性（图2和图3）。如果连接不正确，旁路二极管可能会损坏

☆ PV modules can be wired in series to increase voltage. Connect wires from the positive terminal of one module to the negative terminal of the next module. Figure 2 shows modules connected in series.

光伏组件串联连接电压累加。从一块组件的正极接线端连接到下一块组件的负极接线端。图2 显示的是组件串联连接。

☆ Connect PV modules in parallel to increase current. Connect wires from the positive terminal of one module to the positive terminal on the next module. Figure 3 shows modules connected.

光伏组件并联连接电流累加。从一块组件的正极接线端连接到下一块组件的正极接线端。图 3 显示的是组件并联连接。

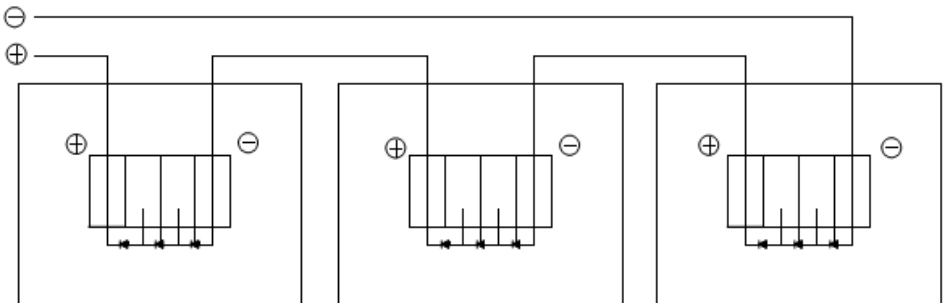

Figure 2.SERIES for more voltage

图2 串联增加电压

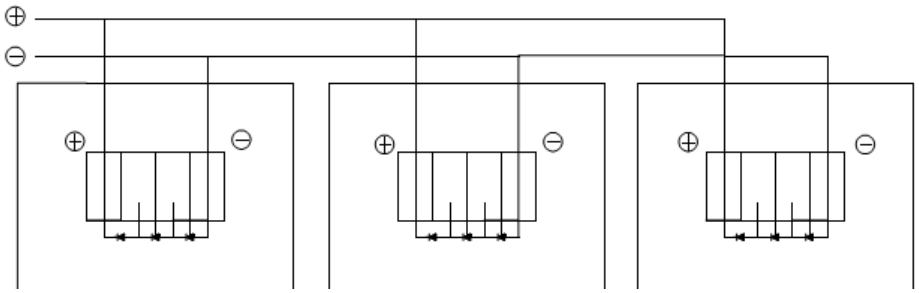

Figure 3.PARALLEL for more current

图3 并联增加电流

☆ These junction boxes have been designed to be easily interconnected in series for their well-connected cable and connector with IP67 protection grade at least.

组件的设计中，现场的连接使用密封的防护等级为IP67及以上的接线盒，为导线及其相应的连接提供环境影响的防护，为未绝缘带电部件提供可接触的保护。

☆ Each Modules has two single-conductor wires, one positive and one negative, which are pre-wired inside the junction box

接线盒有连接好的电缆线和防护等级为IP67及以上的连接器。这些设计便于组件的串联。每个组件有两根单独连接到接线盒内的导线，一个正极，一个负极。

☆ The connectors at the opposite end of these wires allow easy series connection of adjacent Modules by firmly inserting the positive connector of a Module into the negative connector of an adjacent Module until the connector is fully seated.

通过把一个组件导线一端的正极接口插入相邻组件负极导线的插口，就可以把两个组件串联。

☆ Use field wiring with suitable cross-sectional areas that are approved for use at the maximum short-circuit current of the Modules. EGING recommends installers use only sunlight resistant cables qualified for direct current(DC)wiring in PV systems.
现场连接组件用的电缆必须能满足组件最大短路电流。采用光伏系统专用的耐光照电缆线。

☆ Cables should be fixed to the mounting structure in such a way that mechanical damage of the cable and/or the modules is avoided. While the cables are sunlight resistant and waterproof, where possible, avoid direct sunlight exposure and water immersion of the cables.
电缆线被固定在支架上的时候，需要避免电缆线或组件被机械性损伤。虽然电缆线是耐光照和防水的，但是也要避免阳光直接照射以及水浸泡电缆。

☆ # Maximum parallel strings without proper measures (e.g. fuseand/or blocking diode): 1 string. Note: Parallel configuration is not limited in case of taking propermeasure (e.g. fuse for protection of module and cable from overcurrent, and/or blocking diode for prevention of unbalanced stringsvoltage) to block the reverse current flow.
#无适当措施（如保险丝或防反二极管）下的最大并联串数：1串。
注：在采取适当措施阻止反向电流流动的情况下（如防止组件和线缆过大电流的保险丝，防止串间电压不均衡的防反二极管），并联配置是没有限制的。

☆ EGing PV recommends that string connection for modules should be 22pcs(60cells modules）and 18pcs(72cells modules). Parallel connection for only 2 pcs modules is not recommended.
推荐组件的串联数量为22块（60片电池片）和18片（72片电池片），不推荐单块组件的并联连接方式。

☆ Type of terminal for field wiring is the same as the Module's.
建议现场布线用的端子型号同组件上的端子型号。

☆ Rating required minimum field wiring:
现场用于连接组件的电缆线最低标准为：

Table1 Rating required minimum field wiring
表1 线缆最低额定标准

Testing standard 测试标准	Wire size线径	Temperature Rating温度范围
EN 50618:2014	4mm²	-40℃ to +90℃

5.2 CONNECTORS连接器

☆ Keep connectors dry and clean, and ensure that connector caps are hand tight before connecting the Modules.
请保持连接器的干燥和清洁，在连接前请确保连接器的螺帽处于拧紧状态。

☆ Do not attempt to make an electrical connection with wet, soiled, or otherwise faulty connectors.
在连接器是潮湿的、脏污的或者其他非正常状态下，请不要连接连接器。

☆ Avoid sunlight exposure and water immersion of the connectors. Avoid allowing connectors to rest on the ground.
避免连接器被阳光直射或浸泡在水里。避免连接器散落在地面或屋顶上。

☆ Faulty connections can result in arcs and electrical shock. Check that all electrical connections are securely fastened. Make sure that all locking connectors are fully engaged and locked.
错误的连接可能产生电弧或电击。请仔细检查所有的电气连接是牢靠的。确保所有带锁定的连接器完全锁定住。

☆ The Suppliers and types of connectors should be in accordance with the Standard ICE 62852. For

more details, please see the CDF.

连接器型号及供应商的选择都必须经过IEC 62852的认证。具体可见相关认证的CDF表。

5.3 BYPASS DIODES 旁路二极管

☆ The junction boxes used with EGING modules contain bypass diodes wired in parallel with the PV cell strings. In the case of partial shading, the diodes bypass the current generated by the non-shaded cells, thereby limiting modules heating and performance losses. Bypass diodes are not over-current protection devices.

亿晶太阳能组件的接线盒中包含了旁路二极管并且并联在组件内的电池串上。当组件局部发生热斑现象，二极管将工作，让主电流不再从热斑电池片上通过，从而限制组件的发热和性能损失。旁路二极管不是过电流保护装置。

☆ The type and rating of bypass diode to be used must pass the tests (IEC 62790:2014) of the Junction Box. For more details, please see the CDF related Junction Box.

二极管型号及额定值在必须在接线盒的IEC 62790:2014测试中已经认证，详细请参考匹配的接线盒认证的CDF表。

☆ In the event of a known or suspected diode failure, installers or maintenance providers should contact JA Solar. Never attempt to open the junction box by yourself .

当知道或怀疑二极管发生故障时，请安装商或者系统维护商立即联系亿晶光电。请不要自行尝试打开组件的接线盒。

5.4 ELECTRICAL RATINGS电器额定值

☆ Refer to the mechanical and electrical ratings of individual models of PV module in the annex of this manual.

参考本手册附件中个别型号光伏组件的机械和电气额定值。

☆ Under normal conditions, a photovoltaic module is likely to experience conditions that produce more current and/or voltage than reported at Standard Test Conditions. Accordingly, the values of Isc and Voc marked on this module should be multiplied by a factor of 1.25 when determining component voltage ratings, conductor capacities, fuse sizes and size of controls connected to the module output.

在正常情况下，一块组件可能会遇到比在标准测试条件下产生更多的电流和（或）电压。因此，当计算额定电压、导线容量、熔断器规格、连接到组件输出端的控制器的尺寸时，应用该组件上标明的短路电流和开路电压值乘以1.25倍。

☆ Temperature coefficient：

温度系数为

Table 2 ： Temperature coefficient

表2 温度系数

Temperature coefficient 温度系数	Mono 单晶	Poly 多晶
δ =Pmax（%/℃）	-0.390	-0.405
β =Voc（%/℃）	-0.295	-0.298
α =Isc（%/℃）	0.039	0.041

6. GROUNDING接地

☆ The framegrounding is considered within the requirement of local regulation at the site of installation.

边框接地要求考虑安装现场当地的法律法规。

☆ When needed this grounding,please refer to below example of connection. Please be careful in

arranging the system ground so that the removal of one module from the circuit will not interrupt the grounding of any other modules.The modules should be grounded to the same electrical point.
组件接地时，请参阅下面示例中的连接。请合理安排系统的接地连接方式，方便今后抽取独块组件而不影响其他组件的接地。这些组件应该在在同一个电气点上接地。

☆ Each PV module has grounding holes. Do not drill additional grounding holes on the frame. And the negative pole of the module must be grounded. Otherwise, the module warrantymay be void.
每块组件边框上都有接地孔。请不要在组件边框上钻任何附加的接地孔，组件负极也必须接地，否则组件质保将失效。

☆ An example of acceptable ground connection using a screw, nut（hardware not provided） and washer retaining a ground screw is shown in figure 4. The size of the grounding cable should be decided by the professional person who responsible for electrical installation.In a connection of this type, the hardware (such as a toothed locked washer / star washer) must score the frame surface to make positive electrical contact with the frame. The ground wiremust be considered within the requirement of local and regulation at the site of installation.
推荐使用的接地连接如图4所示，包括螺钉、螺母（不提供硬件）和垫圈等。接地线缆的尺寸由负责电气安装的专业人员决定。在这种类型的连接中，硬件（例如带齿垫圈/星形垫圈）必须刺破边框表面，与边框产生良好的电接触。在安装现场接地线的安装须考虑地方性法规的要求。

☆ If steel parts used for grounding purpose, steel parts must be plated, painted or enameled for protection against corrosion before usage.
如果钢件用于接地，在使用前必须做防腐蚀的电镀，油漆或瓷漆。

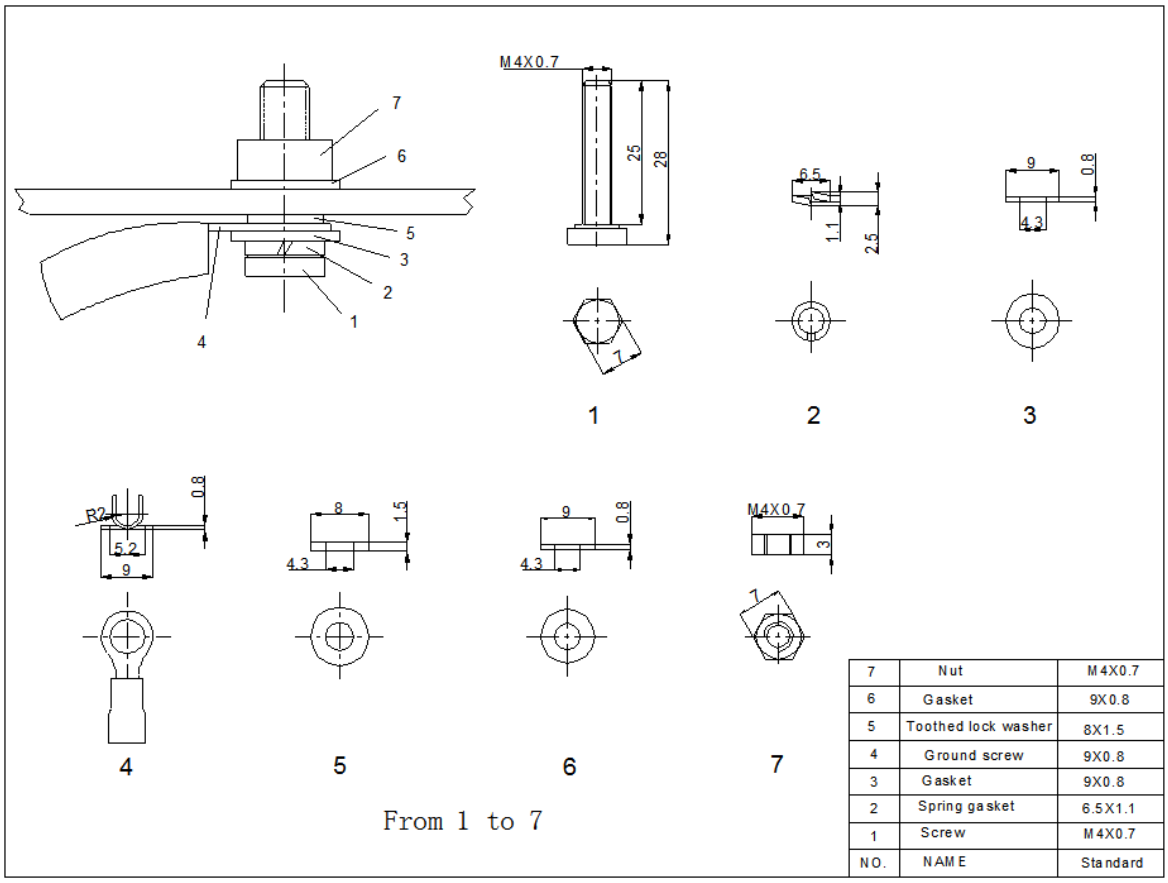

NO.	NAME	Standard
7	Nut	M4X0.7
6	Gasket	9X0.8
5	Toothed lock washer	8X1.5
4	Ground screw	9X0.8
3	Gasket	9X0.8
2	Spring gasket	6.5X1.1
1	Screw	M4X0.7

Figure 4.Example of acceptable ground connection

图4可接受接地的例子

7. MECHANICAL GROUNDING机械安装

7.1 GENERAL REQUIREMENT 常规要求

☆ Please make sure that all the information described in the installationmanual is proper for your installation.Please review the descriptions and drawings carefully; not mounting the modules according to one of these methods may void your warranty. These mounting methods are designed for front side to allow module loading of 3600Pa and back side to allow module loading of 1600Pa（a safety factor of 1.5）.
请确保安装手册中所描述的所有信息适用于你的安装。请仔细检查说明和图纸，不按其中的方式安装组件可能会使您的质保无效。这些安装方法的设计载荷为正面3600Pa，背面1600Pa（安全因子为1.5）。

☆ Support structures that PV modules are mounted on should be rigid. EGING PV modules are designed to secure their electric performance under the condition that they are mounted on rigid support structures. Deformation of support structure may damage PV module with its electric performance.
光伏组件安装的支架结构应该是牢固的。亿晶光电组件设计被安装在牢固支架结构下，以确保电性能。支架结构变形会影响光伏组件的电气性能。

☆ If the modules are to be installed on the roof or wall of a building, the standoff method or the rack method is recommended. Clearance between the module frames and surface of the wall or roof is required to prevent the junction box from touching the mounting surface and to circulate cooling air around the back of the module. The exact space size may be decided by the installer or the system integrator based on the analysis of local weather and the specific roof structure involved.

☆ 如果将组件安装在建筑物的屋顶或墙壁上，建议采用支架的方式。组件边框和墙壁或屋顶表面之间的间隙是必需的，以防止接线盒接触安装表面，并在组件的后面循环冷却空气。准确的空间大小可以由安装者或系统集成商根据当地天气和特定屋顶结构的分析来决定。

☆ There are no limitations in the use of PV modules required to meet the building regulation requirements, in particular those relating to external fire spread. The PV modules can be used in concrete, slate or any other kinds of roofs which are strong enough and .the modules must be installed appropriately. Module installation will (must) ensure weatherproofing.

☆ 符合建筑规范要求，特别是那些与外部火灾蔓延相关时，光伏组件的使用没有任何限制。光伏组件可用于混凝土、板岩或任何其他类型的屋顶，这些屋顶足够坚固，并且这些组件必须安装适当。组件安装（必须）确保耐候性。

7.2 Installation Methods安装方式

☆ Please refer to below” Installation Methods.
见下方的安装方式。

8. MAINTENANCE维护

☆ The modules are designed for long life. The regular inspection and maintenance of the module must be carried out especially during the warranty period. It is the responsibility user must bear. When the module gets damaged, inform the supplier in time(usually 2 weeks).
组件设计的使用寿命很长，必须进行定期检查和维护，尤其是质保期内，这是用户必须承担的责任，并且在发现组件有损坏的时候及时通知供应商（一般在2周内）。

☆ If the angle of the PV module is 9 degrees or more, normal rainfall is sufficient to keep the module glass surface clean under most weather conditions. If dirt build-up becomes excessive, clean the glass surface only with a soft cloth using water. If cleaning the back of the module is required, take utmost

care not to damage the back side materials. Do not use acidic or alkaline cleaning agent to wash the modules. In order to ensure modules' maximum power output, please clean the modules frequency.
如果组件的倾角大于等于9度，在大多数天气条件下正常的降雨足以保持组件玻璃表面的清洁。如果污垢积聚过多，清洗组件玻璃表面。如果需要清洗组件背面，请注意不要损坏背面材料。不要用酸性或碱性清洗剂清洗组件。为了保证系统获得最大输出，建议定期清洗组件。

☆ Do not trample on the module when wash it. Do the security work.
清洗时严禁踩踏组件，做好安全防护工作。

☆ In order to ensure the operation of the system, please check the connection of wiring and the state of the jacket of wiresevery now and then.
为了保证系统的运行，请定期检查接线和电线护套是否良好。

☆ If modules (Slanting Installation) are covered with thick snow, especially, at the bottom of the module surface, you shall take proper measures to remove the snow.
当组件表面有积雪时，组件下侧积雪更多（组件倾斜安装时），要采取适当的措施防止组件受损。

Installation Methods

EG-***M72-HD　EG-***M72-HDV

Mounting Using Frame Bolt Holes (Figures 1 、2 & 3)安装孔螺栓安装（图1、2和3）

The modules may be fastened to a support using the bolt holes in thebottom of the frame at location “C”, as shown in Figure 1 (back view of the module) 、Figure 2 (mounting detail) and Figure 3 (parts detail). Themodules have 4 mounting holes to be installed with four (4) M8 bolts..

组件可以通过边框C面预留的安装孔固定在支架上，如图1（组件背面视图）、图2（安装细节）、图3（配件细节）。组件有四个安装孔，用4个M8螺栓安装。

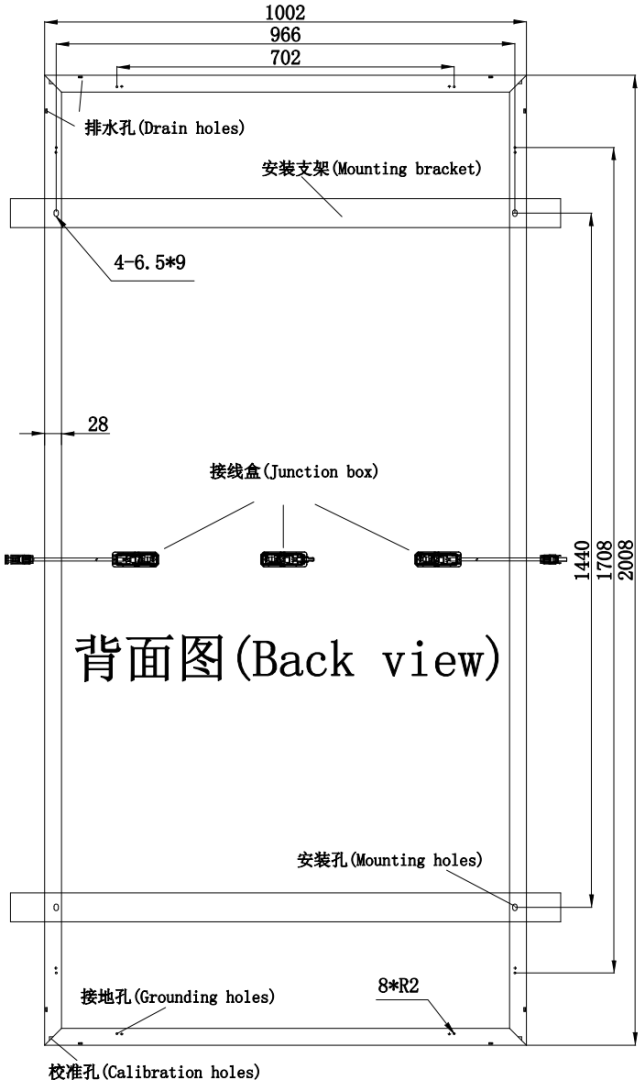

Figures 1Figures 3.

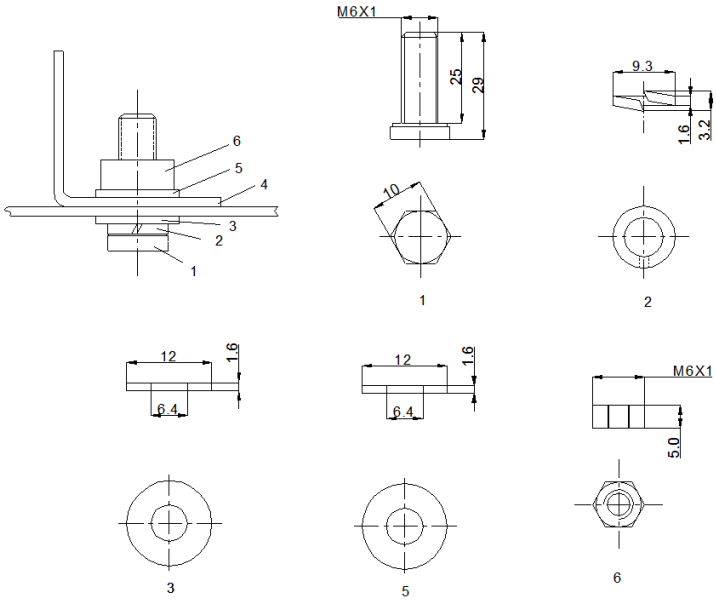

Figures 2

6	Nut	M6X1	S35C
5	Gasket	12X1.6	Fe
4	Mount	≈5	Q235
3	Gasket	12X1.6	Fe
2	Spring gasket	9.3X1.6	Mn65
1	Screw	M6X1	S35C
NO.	NAME	Size	Material

Mounting Using Clips on Long Edge of Module:组件长边使用压块安装：

1) Long EdgeParallel to Array Rails (Figure 5)长边与阵列导轨平行（图5）

The modules may be mounted using clips (clamps) designed for solar modules as shown in Figures 4 and 5. Note that the clip positions are important – the clip centerlines must be between 259mm and 309 mm from the end of the module. The module must be supported along the length of the long edge, and should overlap the array rail by at least 20mm. Note that the mounting clips should meet the minimum dimensions (catch width of 5mm and length of 30mm) as shown in Figure 4 a）. The array rails must support the bottom of the modules and must be continuous pieces (no breaks in the rail).

组件可以使用如图4和图5所示的设计太阳能压块来安装。注意：压块的位置很重要-压块的中心位置距离组件末端距离在259-309mm之间。组件长边的长度方向必须有支撑，并且与阵列导轨至少20mm的重叠。注意：安装压块应满足最小尺寸（被卡住的5mm宽，30mm长），如图4 a) 所示。阵列的导轨必须支撑组件的底部，导轨必须是连续的（导轨无断裂）。

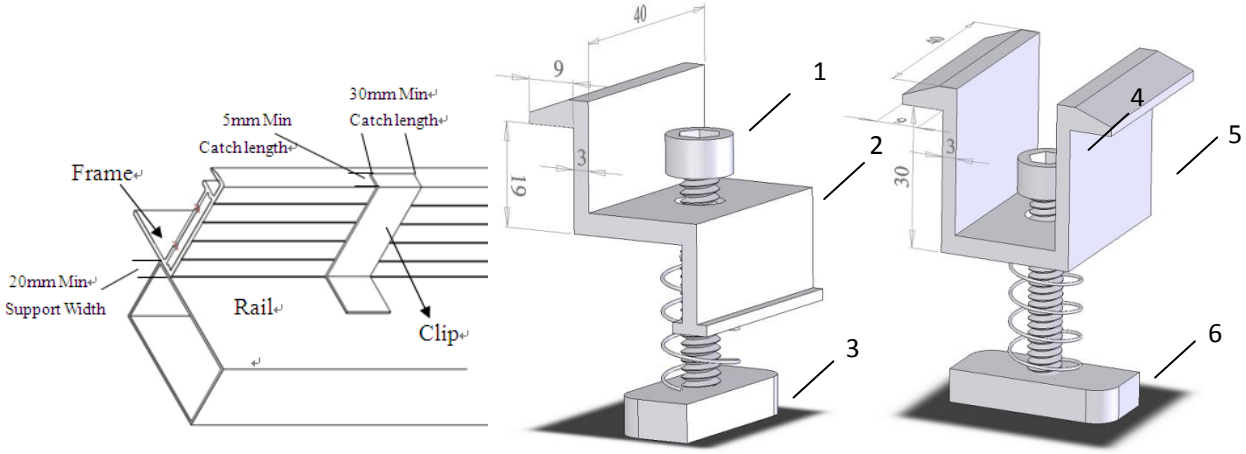

a) b) c)

6	**Nut**	**M8**	**S35C**
5	**Clip2**	**As shown in figure c)**	**Material**
4	**Screw**	**M8**	**S35C**
3	**Nut**	**M8**	**S35C**
2	**Clip1**	**As shown in figure b)**	**Material**
1	**Screw**	**M8**	**S35C**
NO.	**NAME**	**Standard**	**Material**

Figures 4

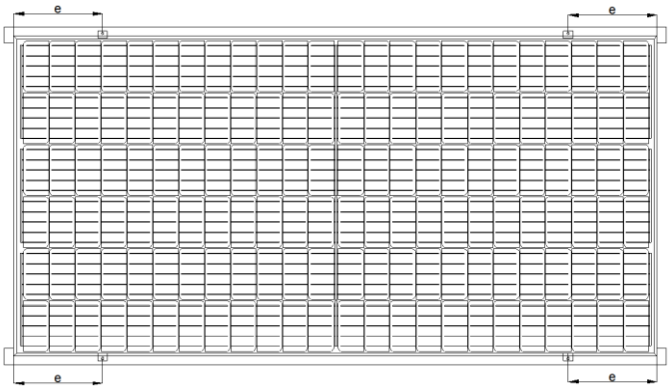

Figure 5:259mm＜e＜309mm

2) Long EdgePerpendicular to Array Rails (Figure 6)长边与阵列导轨垂直（图6）

The modules may also be mounted using clips on the long sides of the module when the array rails are perpendicular to the long sides, as shown in Figure 6. The clip centerlines must be between 259mm and 309mm from the ends of the module. Note that the mounting clips should meet the minimum dimensions (catch width of 5mm and length of 30mm) shown in Figure 4 a). The array rails must support the bottom of the modules and must be continuous pieces (no breaks in the rail).

当长边与阵列导轨垂直时，也可以使用压块在组件的长边安装，如图6所示。压块的中心位置距离组件末端距离在259-309mm之间。注意：安装压块应满足最小尺寸（被卡住的5mm宽，30mm长）如图4 a）所示。阵列的导轨必须支撑组件的底部，导轨必须是连续的（导轨无断裂）。

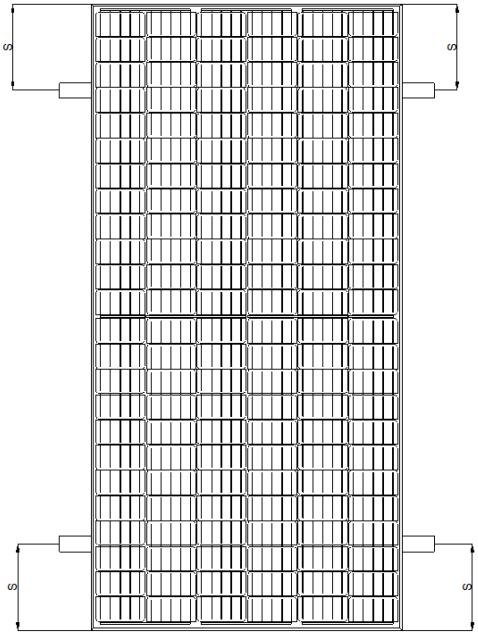

Figures 6: 259mm＜s＜309mm

Installation Methods

EG-***M72-HD　EG-***M72-HDV

Mounting Using Frame Bolt Holes (Figures 1 、2 & 3)安装孔螺栓安装（图1、2和3）

The modules may be fastened to a support using the bolt holes in thebottom of the frame at location “C”, as shown in Figure 1 (back view of the module) 、Figure 2 (mounting detail) and Figure 3 (parts detail). Themodules have 4 mounting holes to be installed with four (4) M8 bolts..

组件可以通过边框C面预留的安装孔固定在支架上，如图1（组件背面视图）、图2（安装细节）、图3（配件细节）。组件有四个安装孔，用4个M8螺栓安装。

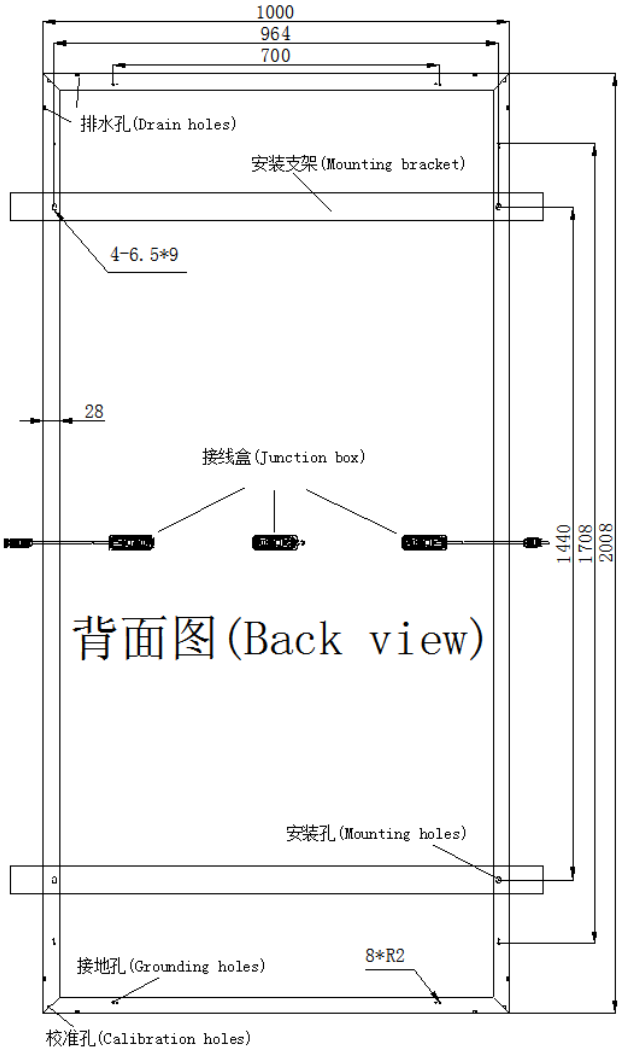

Figures 1Figures 3.

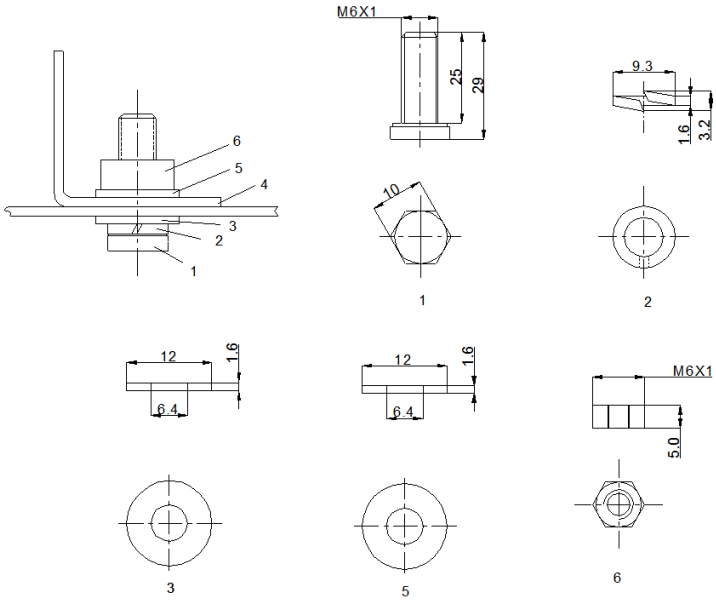

Figures 2

6	Nut	M6X1	S35C
5	Gasket	12X1.6	Fe
4	Mount	≈5	Q235
3	Gasket	12X1.6	Fe
2	Spring gasket	9.3X1.6	Mn65
1	Screw	M6X1	S35C
NO.	NAME	Size	Material

Mounting Using Clips on Long Edge of Module:组件长边使用压块安装：

3) Long EdgeParallel to Array Rails (Figure 5)长边与阵列导轨平行（图5）

The modules may be mounted using clips (clamps) designed for solar modules as shown in Figures 4 and 5. Note that the clip positions are important – the clip centerlines must be between 259mm and 309 mm from the end of the module. The module must be supported along the length of the long edge, and should overlap the array rail by at least 20mm. Note that the mounting clips should meet the minimum dimensions (catch width of 5mm and length of 30mm) as shown in Figure 4 a）. The array rails must support the bottom of the modules and must be continuous pieces (no breaks in the rail).

组件可以使用如图4和图5所示的设计太阳能压块来安装。注意：压块的位置很重要-压块的中心位置距离组件末端距离在259-309mm之间。组件长边的长度方向必须有支撑，并且与阵列导轨至少20mm的重叠。注意：安装压块应满足最小尺寸（被卡住的5mm宽，30mm长），如图4 a) 所示。阵列的导轨必须支撑组件的底部，导轨必须是连续的（导轨无断裂）。

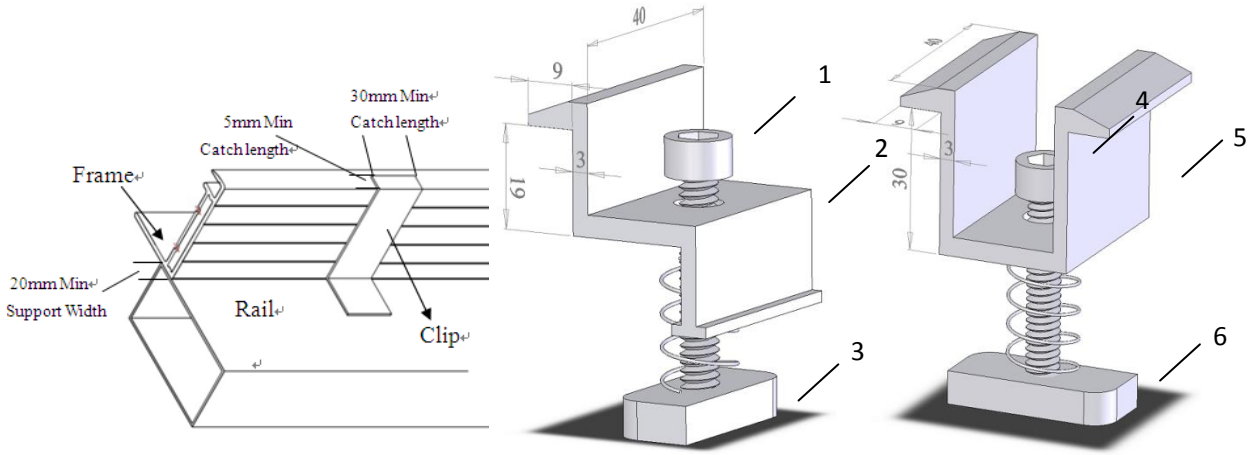

a) b) c)

6	**Nut**	**M8**	**S35C**
5	**Clip2**	**As shown in figure c)**	**Material**
4	**Screw**	**M8**	**S35C**
3	**Nut**	**M8**	**S35C**
2	**Clip1**	**As shown in figure b)**	**Material**
1	**Screw**	**M8**	**S35C**
NO.	**NAME**	**Standard**	**Material**

Figures 4

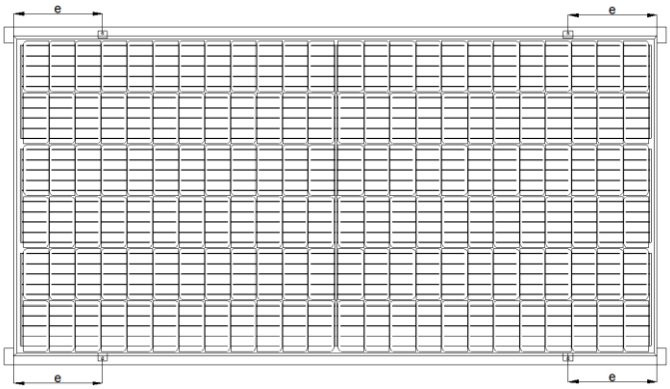

Figure 5:259mm＜e＜309mm

4) Long EdgePerpendicular to Array Rails (Figure 6)长边与阵列导轨垂直（图6）

The modules may also be mounted using clips on the long sides of the module when the array rails are perpendicular to the long sides, as shown in Figure 6. The clip centerlines must be between 259mm and 309mm from the ends of the module. Note that the mounting clips should meet the minimum dimensions (catch width of 5mm and length of 30mm) shown in Figure 4 a). The array rails must support the bottom of the modules and must be continuous pieces (no breaks in the rail).

当长边与阵列导轨垂直时，也可以使用压块在组件的长边安装，如图6所示。压块的中心位置距离组件末端距离在259-309mm之间。注意：安装压块应满足最小尺寸（被卡住的5mm宽，30mm长）如图4 a）所示。阵列的导轨必须支撑组件的底部，导轨必须是连续的（导轨无断裂）。

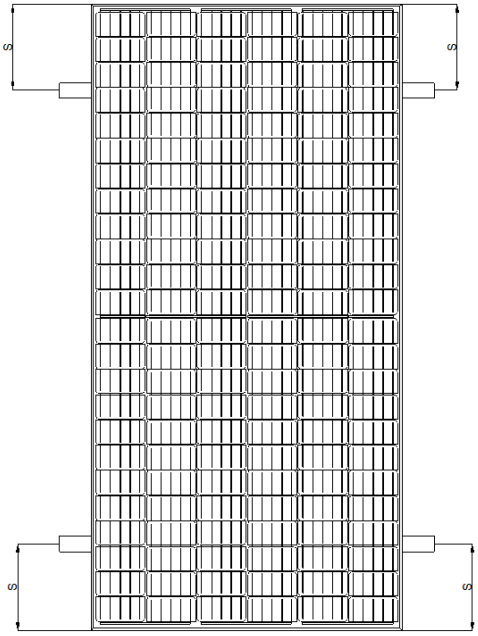

Figures 6: 259mm＜s＜309mm

Installation Methods

EG-***M60-HD　EG-***M60-HDV

Mounting Using Frame Bolt Holes (Figures 1 、2 & 3)安装孔螺栓安装（图1、2和3）

The modules may be fastened to a support using the bolt holes in the bottom of the frame at location “C”, as shown in Figure 1 (back view of the module) 、Figure 2 (mounting detail) and Figure 3 (parts detail). Themodules have 4 mounting holes to be installed with four (4) M6bolts.

组件可以通过边框C面预留的安装孔固定在支架上，如图1（组件背面视图）、图2（安装细节）、图3（配件细节）。组件有四个安装孔，用4个M6螺栓安装。

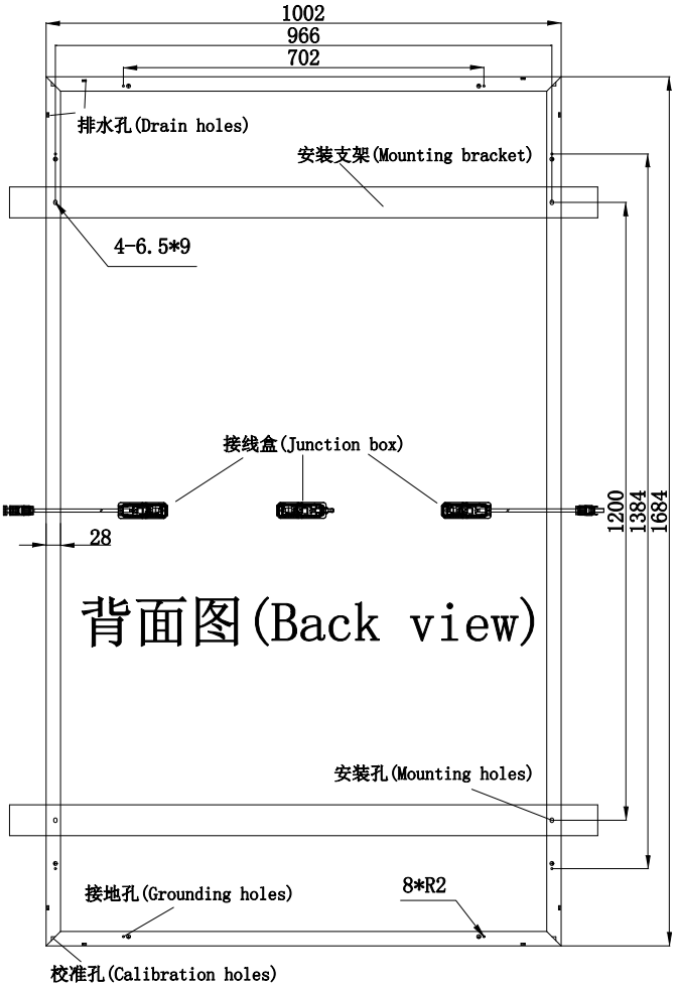

Figures 1Figures 3

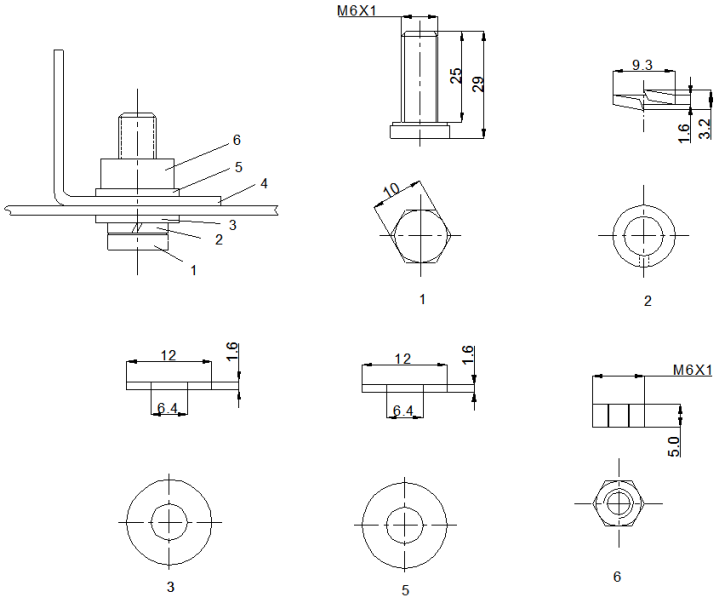

Figures 2

6	Nut	M6X1	S35C
5	Gasket	12X1.6	Fe
4	Mount	≈5	Q235
3	Gasket	12X1.6	Fe
2	Spring gasket	9.3X1.6	Mn65
1	Screw	M6X1	S35C
NO.	NAME	Size	Material

Mounting Using Clips on Long Edge of Module: 组件长边使用压块安装：

1) **Long Edge Parallel to Array Rails (Figure 5)**长边与阵列导轨平行（图5）

The modules may be mounted using clips (clamps) designed for solar modules as shown in Figures 4 and 5. Note that the clip positions are important – the clip centerlines must be between 217mm and 267 mm from the end of the module. The module must be supported along the length of the long edge, and should overlap the array rail by at least 20mm. Note that the mounting clips should meet the minimum dimensions (catch width of 5mm and length of 30mm) as shown in Figure 4 a). The array rails must support the bottom of the modules and must be continuous pieces (no breaks in the rail).

组件可以使用如图4和图5所示的设计太阳能压块来安装。注意：压块的位置很重要-压块的中心位置距离组件末端距离在217-267mm之间。组件长边的长度方向必须有支撑，并且与阵列导轨至少20mm的重叠。注意：安装压块应满足最小尺寸（被卡住的5mm宽，30mm长），如图4 a)所示。阵列的导轨必须支撑组件的底部，导轨必须是连续的（导轨无断裂）。

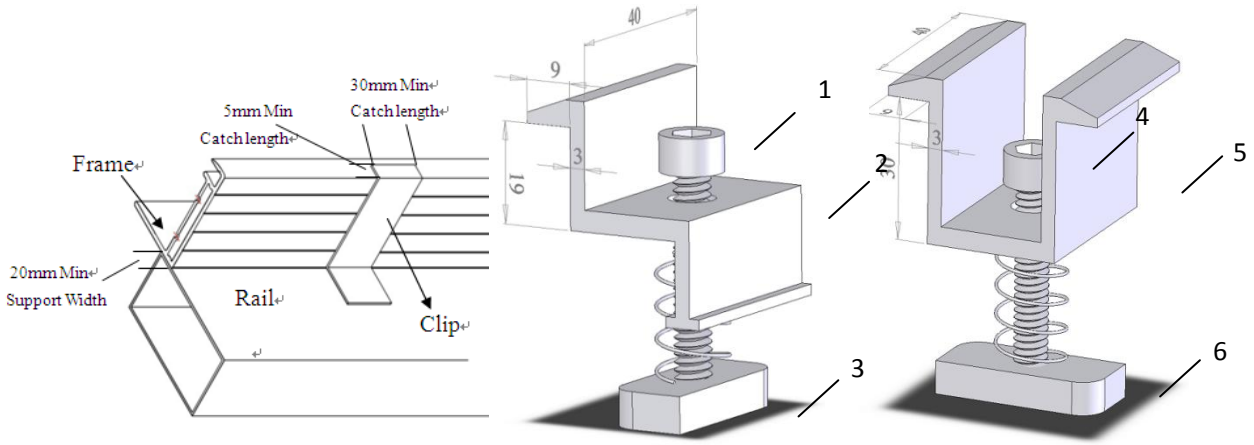

a) b) c)

6	**Nut**	**M8**	**S35C**
5	**Clip2**	**As shown in figure c)**	**Material**
4	**Screw**	**M8**	**S35C**
3	**Nut**	**M8**	**S35C**
2	**Clip1**	**As shown in figure b)**	**Material**
1	**Screw**	**M8**	**S35C**
NO.	**NAME**	**Standard**	**Material**

Figures 4

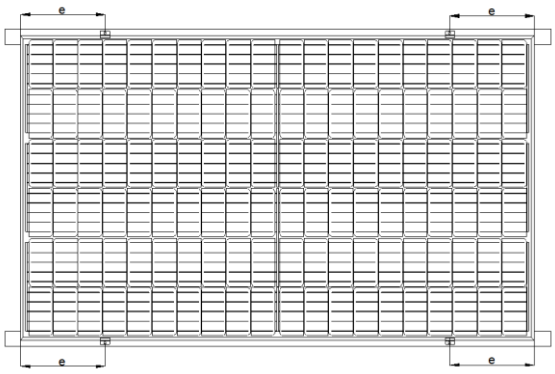

Figure 5:217mm＜e＜267mm

Long EdgePerpendicular to Array Rails (Figure 6)：长边与阵列导轨垂直（图6）

The modules may also be mounted using clips on the long sides ofthe module when the array rails are perpendicular to the long sides,as shown in Figure 6. The clip centerlines must be between 217mmand 267mm from the ends of the module. Note that the mountingclips should meet the minimum dimensions (catch width of 5mm andlength of 30mm) shown in Figure 4 a). The array rails must support thebottom of the modules and must be continuous pieces (no breaks inthe rail)

当长边与阵列导轨垂直时，也可以使用压块在组件的长边安装，如图6所示。压块的中心位置距离组件末端距离在217-267mm之间。注意：安装压块应满足最小尺寸（被卡住的5mm宽，30mm长）如图4 a）所示。阵列的导轨必须支撑组件的底部，导轨必须是连续的（导轨无断裂）。

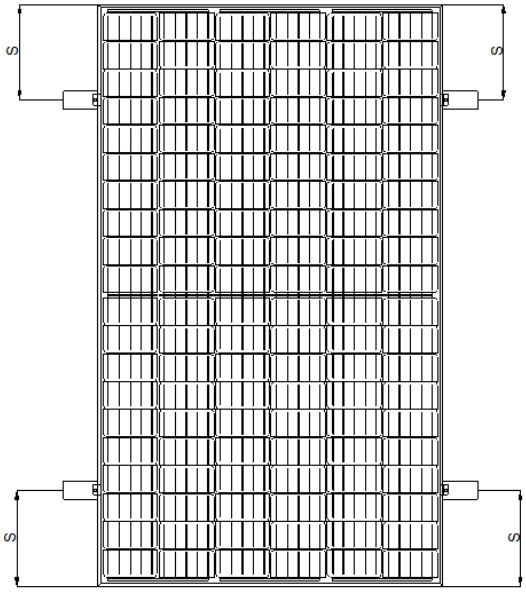

Figures 6: 217mm＜s＜267mm

Installation Methods

EG-***M60-HD　EG-***M60-HDV

Mounting Using Frame Bolt Holes (Figures 1 、2 & 3)安装孔螺栓安装（图1、2和3）

The modules may be fastened to a support using the bolt holes in the bottom of the frame at location “C”, as shown in Figure 1 (back view of the module) 、Figure 2 (mounting detail) and Figure 3 (parts detail). Themodules have 4 mounting holes to be installed with four (4) M6bolts.

组件可以通过边框C面预留的安装孔固定在支架上，如图1（组件背面视图）、图2（安装细节）、图3（配件细节）。组件有四个安装孔，用4个M6螺栓安装。

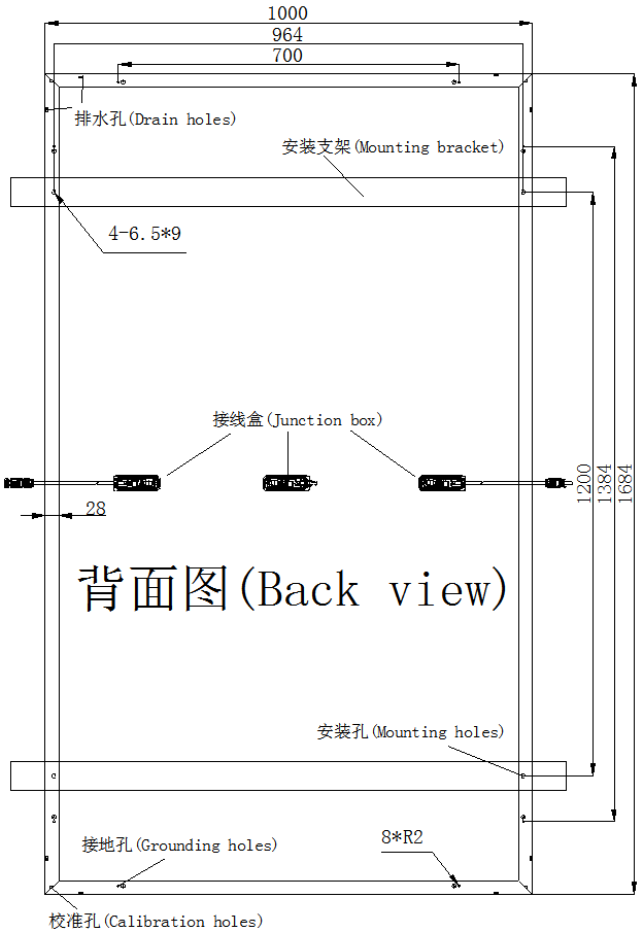

Figures 1Figures 3

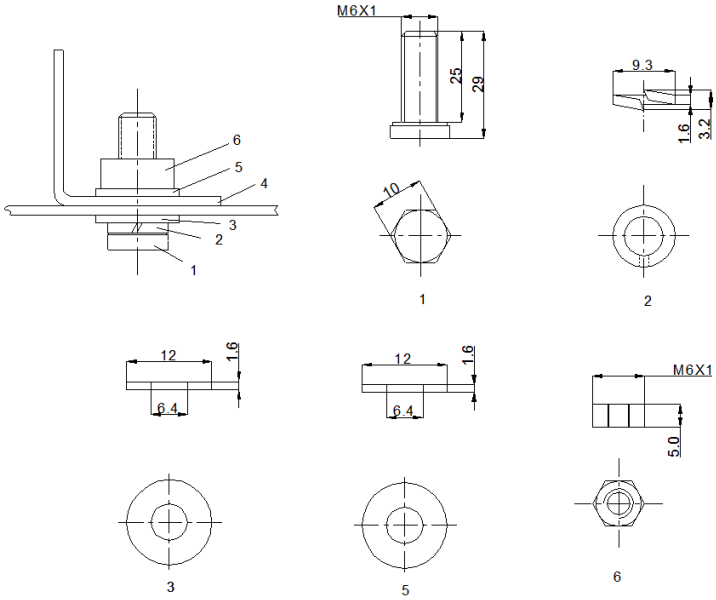

Figures 2

6	Nut	M6X1	S35C
5	Gasket	12X1.6	Fe
4	Mount	≈5	Q235
3	Gasket	12X1.6	Fe
2	Spring gasket	9.3X1.6	Mn65
1	Screw	M6X1	S35C
NO.	NAME	Size	Material

Mounting Using Clips on Long Edge of Module: 组件长边使用压块安装：

2) **Long Edge Parallel to Array Rails (Figure 5)**长边与阵列导轨平行（图5）

The modules may be mounted using clips (clamps) designed for solar modules as shown in Figures 4 and 5. Note that the clip positions are important – the clip centerlines must be between 217mm and 267 mm from the end of the module. The module must be supported along the length of the long edge, and should overlap the array rail by at least 20mm. Note that the mounting clips should meet the minimum dimensions (catch width of 5mm and length of 30mm) as shown in Figure 4 a). The array rails must support the bottom of the modules and must be continuous pieces (no breaks in the rail).

组件可以使用如图4和图5所示的设计太阳能压块来安装。注意：压块的位置很重要-压块的中心位置距离组件末端距离在217-267mm之间。组件长边的长度方向必须有支撑，并且与阵列导轨至少20mm的重叠。注意：安装压块应满足最小尺寸（被卡住的5mm宽，30mm长），如图4 a)所示。阵列的导轨必须支撑组件的底部，导轨必须是连续的（导轨无断裂）。

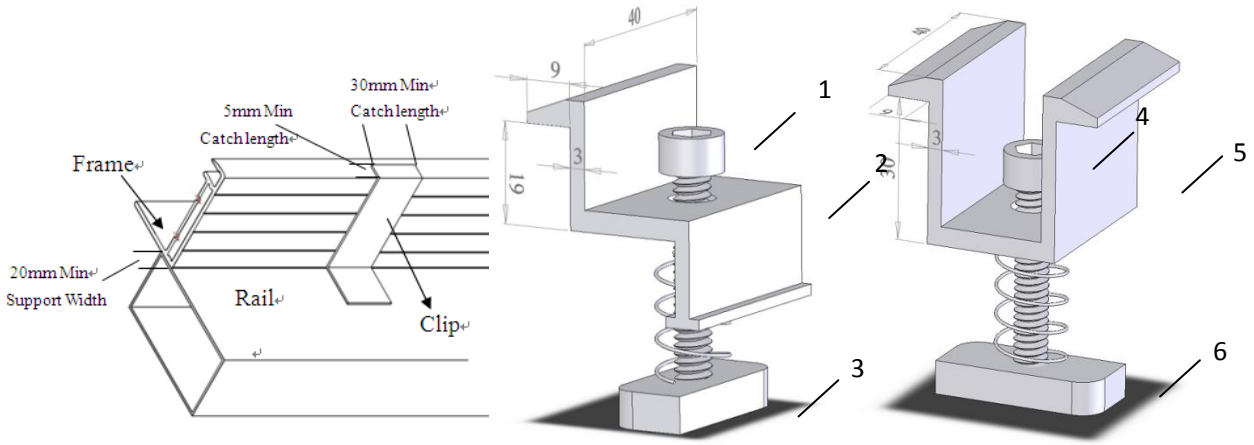

a) b) c)

6	**Nut**	**M8**	**S35C**
5	**Clip2**	**As shown in figure c)**	**Material**
4	**Screw**	**M8**	**S35C**
3	**Nut**	**M8**	**S35C**
2	**Clip1**	**As shown in figure b)**	**Material**
1	**Screw**	**M8**	**S35C**
NO.	**NAME**	**Standard**	**Material**

Figures 4

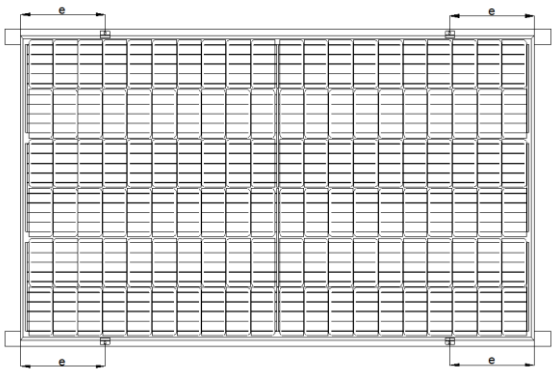

Figure 5:217mm＜e＜267mm

Long EdgePerpendicular to Array Rails (Figure 6)：长边与阵列导轨垂直（图6）

The modules may also be mounted using clips on the long sides ofthe module when the array rails are perpendicular to the long sides,as shown in Figure 6. The clip centerlines must be between 217mmand 267mm from the ends of the module. Note that the mountingclips should meet the minimum dimensions (catch width of 5mm andlength of 30mm) shown in Figure 4 a). The array rails must support thebottom of the modules and must be continuous pieces (no breaks inthe rail)

当长边与阵列导轨垂直时，也可以使用压块在组件的长边安装，如图6所示。压块的中心位置距离组件末端距离在217-267mm之间。注意：安装压块应满足最小尺寸（被卡住的5mm宽，30mm长）如图4 a）所示。阵列的导轨必须支撑组件的底部，导轨必须是连续的（导轨无断裂）。

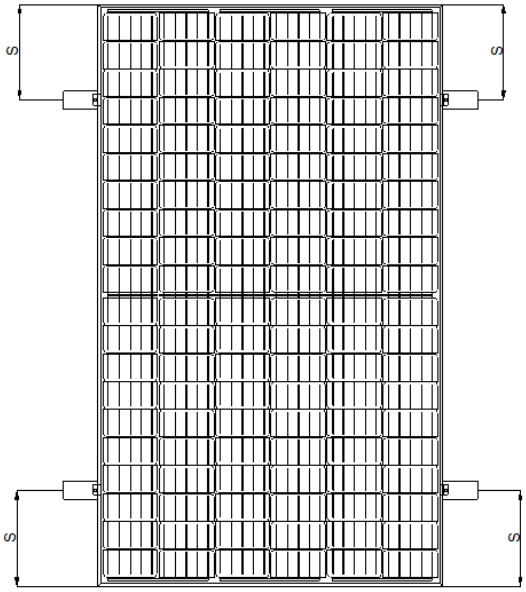

Figures 6: 217mm＜s＜267mm

Installation Methods

EG-***M78-HD　EG-***M78-HDV

Mounting Using Frame Bolt Holes (Figures 1 、2 & 3)安装孔螺栓安装（图1、2和3）

The modules may be fastened to a support using the bolt holes in thebottom of the frame at location “C”, as shown in Figure 1 (back view of the module) 、Figure 2 (mounting detail) and Figure 3 (parts detail). Themodules have 4 mounting holes to be installed with four (4) M6 bolts..

组件可以通过边框C面预留的安装孔固定在支架上，如图1（组件背面视图）、图2（安装细节）、图3（配件细节）。组件有四个安装孔，用4个M6螺栓安装。

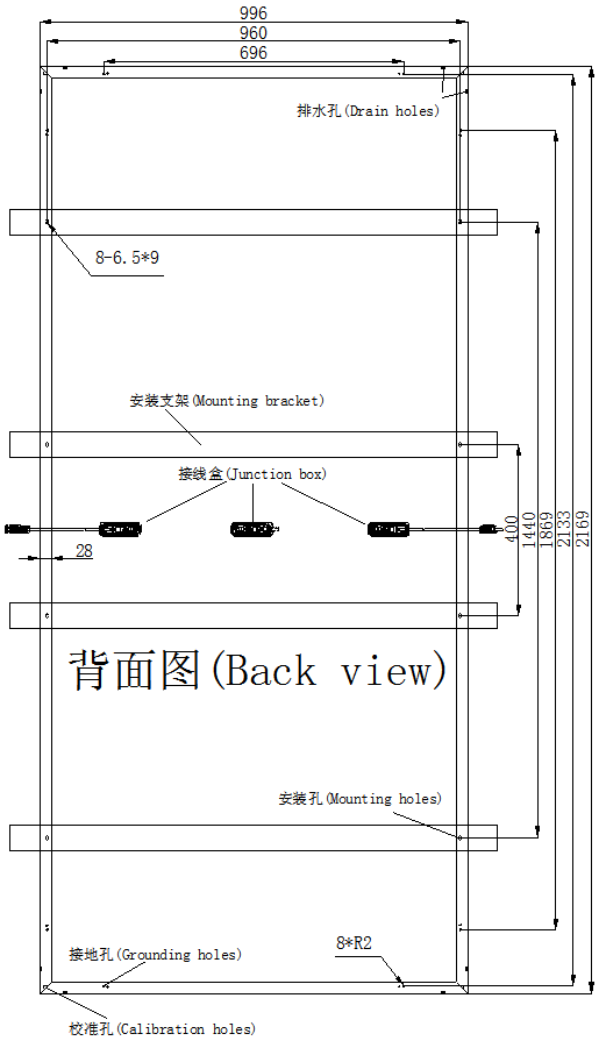

Figures 1Figures 3.

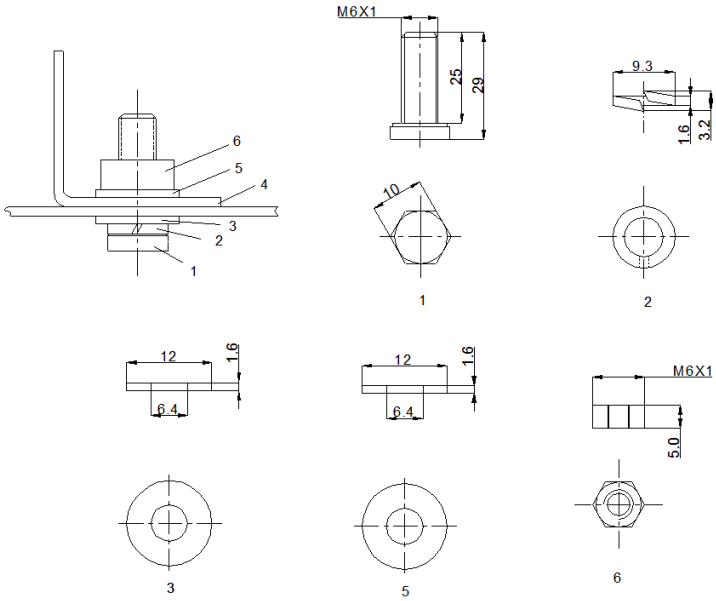

Figures 2

6	Nut	M6X1	S35C
5	Gasket	12X1.6	Fe
4	Mount	≈5	Q235
3	Gasket	12X1.6	Fe
2	Spring gasket	9.3X1.6	Mn65
1	Screw	M6X1	S35C
NO.	NAME	Size	Material

Mounting Using Clips on Long Edge of Module:组件长边使用压块安装：

5) Long EdgeParallel to Array Rails (Figure 5)长边与阵列导轨平行（图5）

The modules may be mounted using clips (clamps) designed for solar modules as shown in Figures 4 and 5. Note that the clip positions are important – the clip centerlines must be between 339mm and 389 mm、859mm and 909 mm from the end of the module. The module must be supported along the length of the long edge, and should overlap the array rail by at least 20mm. Note that the mounting clips should meet the minimum dimensions (catch width of 5mm and length of 30mm) as shown in Figure 4 a). The array rails must support the bottom of the modules and must be continuous pieces (no breaks in the rail).

组件可以使用如图4和图5所示的设计太阳能压块来安装。注意：压块的位置很重要-压块的中心位置距离组件末端距离在339mm-389mm、859mm-909mm之间。组件长边的长度方向必须有支撑，并且与阵列导轨至少20mm的重叠。注意：安装压块应满足最小尺寸（被卡住的5mm宽，30mm长），如图4 a) 所示。阵列的导轨必须支撑组件的底部，导轨必须是连续的（导轨无断裂）。

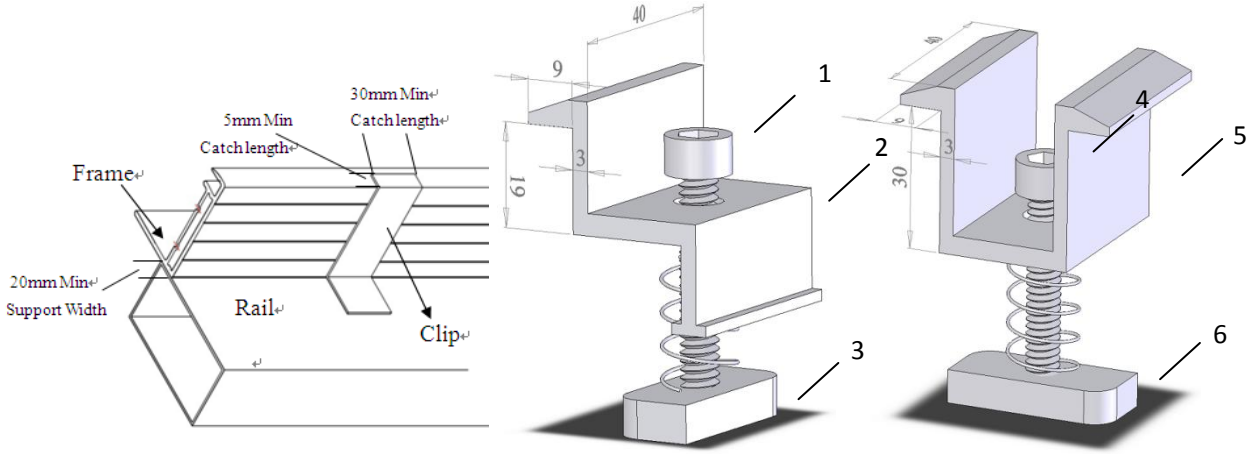

a) b) c)

6	**Nut**	**M8**	**S35C**
5	**Clip2**	**As shown in figure c)**	**Material**
4	**Screw**	**M8**	**S35C**
3	**Nut**	**M8**	**S35C**
2	**Clip1**	**As shown in figure b)**	**Material**
1	**Screw**	**M8**	**S35C**
NO.	**NAME**	**Standard**	**Material**

Figures 4

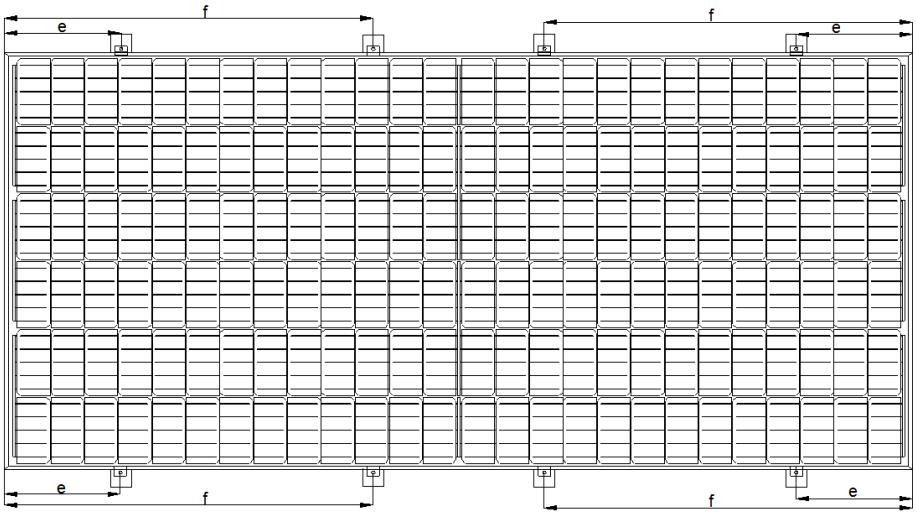

Figure 5:339mm＜e＜389mm、859mm＜f＜909mm

6) Long EdgePerpendicular to Array Rails (Figure 6)长边与阵列导轨垂直（图6）

The modules may also be mounted using clips on the long sides of the module when the array rails are perpendicular to the long sides, as shown in Figure 6. The clip centerlines must be between 339mm and 389 mm、859mm and 909 mm from the ends of the module. Note that the mounting clips should meet the minimum dimensions (catch width of 5mm and length of 30mm) shown in Figure 4 a). The array rails must support the bottom of the modules and must be continuous pieces (no breaks in the rail).

当长边与阵列导轨垂直时，也可以使用压块在组件的长边安装，如图6所示。压块的中心位置距离组件末端距离在339mm-389mm、859mm-909mm之间。注意：安装压块应满足最小尺寸（被卡住的5mm宽，30mm长）如图4 a）所示。阵列的导轨必须支撑组件的底部，导轨必须是连续的（导轨无断裂）。

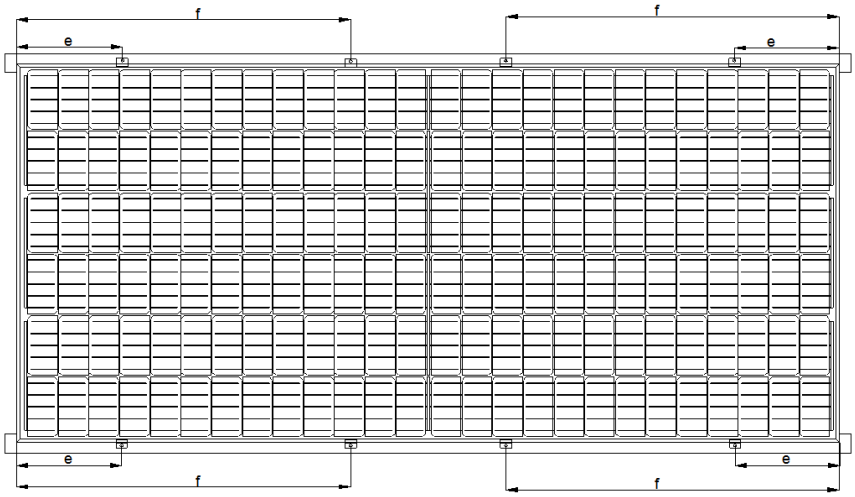

Figures 6: **339mm＜e＜389mm、859mm＜f＜909mm**

Installation Methods

EG-***M66-HD　EG-***M66-HDV

Mounting Using Frame Bolt Holes (Figures 1 、2 & 3)安装孔螺栓安装（图1、2和3）

The modules may be fastened to a support using the bolt holes in the bottom of the frame at location “C”, as shown in Figure 1 (back view of the module) 、Figure 2 (mounting detail) and Figure 3 (parts detail). Themodules have 4 mounting holes to be installed with four (4) M8bolts.

组件可以通过边框C面预留的安装孔固定在支架上，如图1（组件背面视图）、图2（安装细节）、图3（配件细节）。组件有四个安装孔，用4个M8螺栓安装。

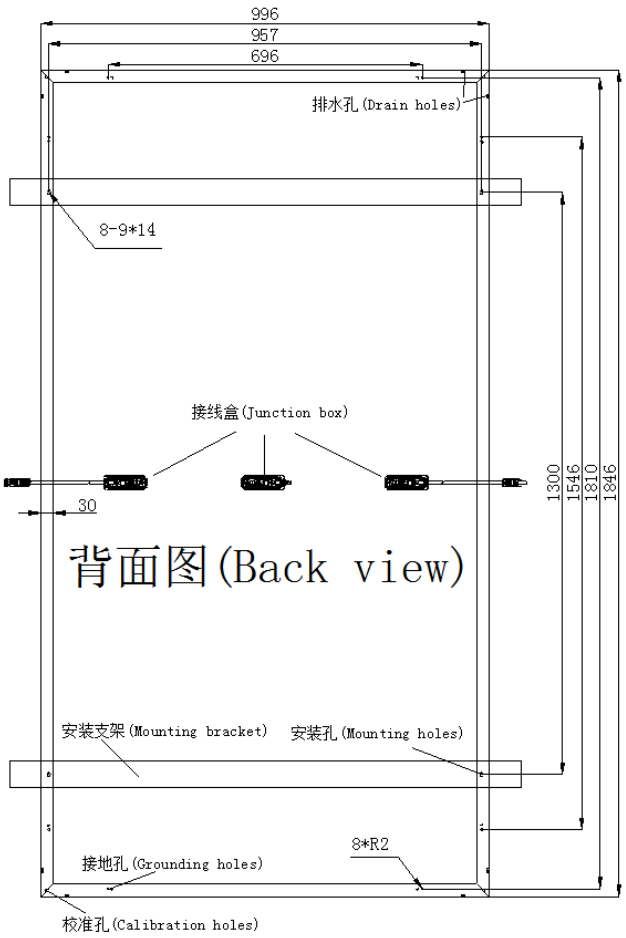

Figures 1Figures 3

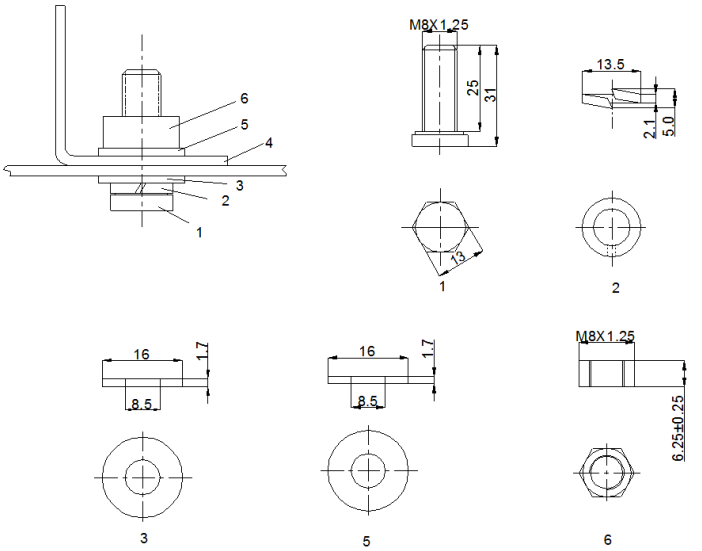

Figures 2

6	Nut	M8X1.25	S35C
5	Gasket	16X1.7	Fe
4	Mount	≈5	Q235
3	Gasket	16X1.7	Fe
2	Spring gasket	13.5X2.1	Mn65
1	Screw	M8X1.25	S35C
NO.	NAME	Size	Material

Mounting Using Clips on Long Edge of Module: 组件长边使用压块安装：

1) **Long Edge Parallel to Array Rails (Figure 5)**长边与阵列导轨平行（图5）

The modules may be mounted using clips (clamps) designed for solar modules as shown in Figures 4 and 5. Note that the clip positions are important – the clip centerlines must be between 248mm and 298 mm from the end of the module. The module must be supported along the length of the long edge, and should overlap the array rail by at least 20mm. Note that the mounting clips should meet the minimum dimensions (catch width of 5mm and length of 30mm) as shown in Figure 4 a). The array rails must support the bottom of the modules and must be continuous pieces (no breaks in the rail).

组件可以使用如图4和图5所示的设计太阳能压块来安装。注意：压块的位置很重要-压块的中心位置距离组件末端距离在248-298mm之间。组件长边的长度方向必须有支撑，并且与阵列导轨至少20mm的重叠。注意：安装压块应满足最小尺寸（被卡住的5mm宽，30mm长），如图4 a)所示。阵列的导轨必须支撑组件的底部，导轨必须是连续的（导轨无断裂）。

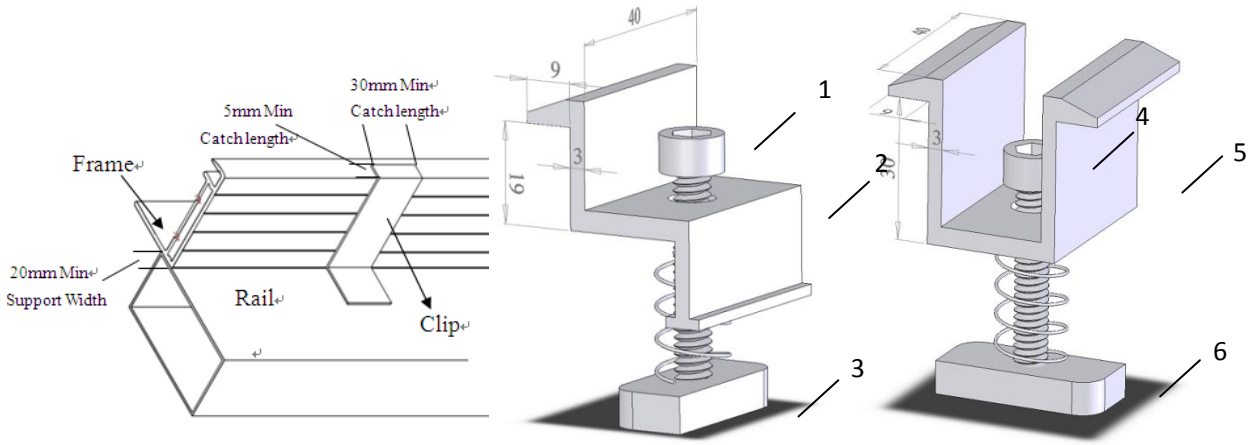

a) b) c)

6	**Nut**	**M8**	**S35C**
5	**Clip2**	**As shown in figure c)**	**Material**
4	**Screw**	**M8**	**S35C**
3	**Nut**	**M8**	**S35C**
2	**Clip1**	**As shown in figure b)**	**Material**
1	**Screw**	**M8**	**S35C**
NO.	**NAME**	**Standard**	**Material**

Figures 4

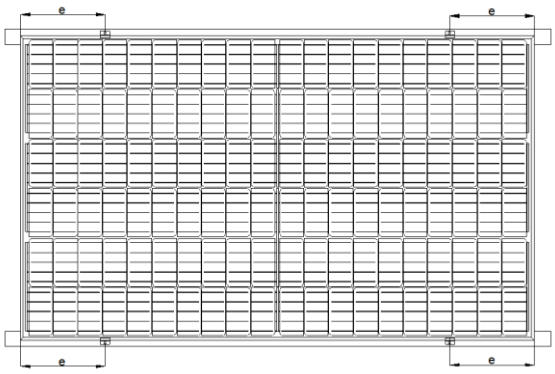

Figure 5:248mm＜e＜298mm

Long EdgePerpendicular to Array Rails (Figure 6)：长边与阵列导轨垂直（图6）

The modules may also be mounted using clips on the long sides ofthe module when the array rails are perpendicular to the long sides,as shown in Figure 6. The clip centerlines must be between 248mmand 298mm from the ends of the module. Note that the mountingclips should meet the minimum dimensions (catch width of 5mm andlength of 30mm) shown in Figure 4 a). The array rails must support thebottom of the modules and must be continuous pieces (no breaks inthe rail)

当长边与阵列导轨垂直时，也可以使用压块在组件的长边安装，如图6所示。压块的中心位置距离组件末端距离在248-298mm之间。注意：安装压块应满足最小尺寸（被卡住的5mm宽，30mm长）如图4 a）所示。阵列的导轨必须支撑组件的底部，导轨必须是连续的（导轨无断裂）。

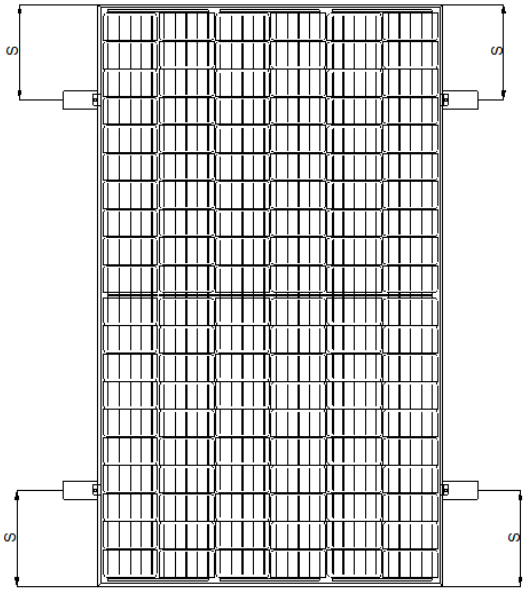

Figures 6: 248mm＜s＜298mm

ANNEX: MECHNICAL AND ELECTRICAL RATINGS

附件：机械和电气额定值

Standard Test Conditions are : irradiance of 1kW/m^2, AM 1.5 spectrum, and cell temperature of 25℃.

标准测试条件：辐照度1kW/m^2，AM 1.5和25℃电池温度。

Pmax of any individual module will be within ±3% tolerance of these specified values.

单个组件的Pmax公差为±3%。

Voc of any individual module will be within ±5% tolerance of these specified values.

Isc of any individual module will be within ±5% tolerance of these specified values.

单个组件的Voc±5%，Isc公差为±5%。

Specifications and electric characteristicsin Table 1 are subject to technical and product innovations.

Information in this document is subject to change without notice.

表1中的规格和电气特性受技术和产品更新的限制。本文件中的信息如有变更，恕不另行通知。

Meaning of crossed –out wheeled dustbin:

划线轮垃圾箱的含义:

Do not dispose of electrical appliances as unsorted municipal waste, use separate collection facilities.Contact your local government for information regarding the collection systems available. If electrical appliances are disposed of in landfills or dumps, hazardous substances can leak into the groundwater and get into the food chain, damaging your health and well-being.When replacing old appliances with new ones, the retailer is legally obligated to take back your old appliance for disposals at least free of charge.

请勿将电器作为未分类的城市垃圾处理，应使用独立的收集设置。欲了解有关收集系统的信息，请联系当地政府。如果电器被填埋或倾倒，有害物质会渗入地下水，进入食物链，损害您的健康和福祉。在用新电器替换旧电器时，零售商在法律上有义务回收你的旧电器进行处理，至少是免费的。

Table 1: Specifications for EG –series photovoltaic modules under STC

表1：在STC下的EG系列光伏组件规格书

Type of cells 电池类别	Type of Module 组件型号	Maximum power Pmax (W)	Operating Voltage Vmp (V)	Operating Current Imp (A)	Open Circuit Voltage Voc (V)	Short Circuit Current Isc (A)	Max.Series Fuse Rating(A)	system voltage (V)
144cells mono 144 片单晶	EG-360M72-HD	360	38.55	9.34	47.68	9.78	20	1000
	EG-365M72-HD	365	38.75	9.42	47.88	9.86	20	1000
	EG-370M72-HD	370	38.95	9.50	48.09	9.94	20	1000
	EG-375M72-HD	375	39.15	9.58	48.29	10.02	20	1000
	EG-380M72-HD	380	39.34	9.66	48.49	10.10	20	1000
	EG-385M72-HD	385	39.61	9.72	48.68	10.18	20	1000
	EG-390M72-HD	390	39.72	9.82	48.87	10.26	20	1000
	EG-395M72-HD	395	39.90	9.90	49.06	10.34	20	1000
	EG-400M72-HD	400	40.09	9.98	49.24	10.42	20	1000
	EG-405M72-HD	405	40.26	10.06	49.43	10.50	20	1000
	EG-410M72-HD	410	40.44	10.14	49.62	10.58	20	1000
	EG-415M72-HD	415	40.61	10.22	49.80	10.66	20	1000

Type of cells 电池类别	Type of Module 组件型号	Maximum power Pmax (W)	Operating Voltage Vmp (V)	Operating Current Imp (A)	Open Circuit Voltage Voc (V)	Short Circuit Current Isc (A)	Max.Series Fuse Rating(A)	system voltage (V)
	EG-420M72-HD	420	40.82	10.29	50.00	10.73	20	1000
	EG-425M72-HD	425	40.99	10.37	50.18	10.82	20	1000
	EG-430M72-HD	430	41.19	10.44	50.39	10.90	20	1000
	EG-435M72-HD	435	41.39	10.51	50.59	10.97	20	1000
	EG-440M72-HD	440	41.59	10.58	50.79	11.04	20	1000
144cells mono 144 片单晶	EG-360M72-HDV	360	38.55	9.34	47.68	9.78	20	1500
	EG-365M72-HDV	365	38.75	9.42	47.88	9.86	20	1500
	EG-370M72-HDV	370	38.95	9.50	48.09	9.94	20	1500
	EG-375M72-HDV	375	39.15	9.58	48.29	10.02	20	1500
	EG-380M72-HDV	380	39.34	9.66	48.49	10.10	20	1500
	EG-385M72-HDV	385	39.61	9.72	48.68	10.18	20	1500
	EG-390M72-HDV	390	39.72	9.82	48.87	10.26	20	1500
	EG-395M72-HDV	395	39.90	9.90	49.06	10.34	20	1500
	EG-400M72-HDV	400	40.09	9.98	49.24	10.42	20	1500
	EG-405M72-HDV	405	40.26	10.06	49.43	10.50	20	1500
	EG-410M72-HDV	410	40.44	10.14	49.62	10.58	20	1500
	EG-415M72-HDV	415	40.61	10.22	49.80	10.66	20	1500
	EG-420M72-HDV	420	40.82	10.29	50.00	10.73	20	1500
	EG-425M72-HDV	425	40.99	10.37	50.18	10.82	20	1500
	EG-430M72-HDV	430	41.19	10.44	50.39	10.90	20	1500
	EG-435M72-HDV	435	41.39	10.51	50.59	10.97	20	1500
	EG-440M72-HDV	440	41.59	10.58	50.79	11.04	20	1500

Type of cells 电池类别	Type of Module 组件型号	Maximum power Pmax (W)	Operating Voltage Vmp (V)	Operating Current Imp (A)	Open Circuit Voltage Voc (V)	Short Circuit Current Isc (A)	Max.Series Fuse Rating(A)	system voltage (V)
120cells mono 120 片单晶	EG-300M60-HD	300	32.12	9.34	39.76	9.81	20	1000
	EG-305M60-HD	305	32.35	9.43	39.98	9.90	20	1000
	EG-310M60-HD	310	32.57	9.52	40.20	9.99	20	1000
	EG-315M60-HD	315	32.78	9.61	40.42	10.08	20	1000
	EG-320M60-HD	320	32.99	9.70	40.63	10.17	20	1000
	EG-325M60-HD	325	33.20	9.79	40.74	10.26	20	1000
	EG-330M60-HD	330	33.41	9.88	40.94	10.35	20	1000
	EG-335M60-HD	335	33.61	9.97	41.14	10.44	20	1000
	EG-340M60-HD	340	33.80	10.06	41.35	10.53	20	1000
	EG-345M60-HD	345	34.00	10.15	41.54	10.63	20	1000
	EG-350M60-HD	350	34.18	10.24	41.72	10.72	20	1000
	EG-355M60-HD	355	34.37	10.33	41.90	10.81	20	1000
	EG-360M60-HD	360	34.55	10.42	42.08	10.90	20	1000
	EG-365M60-HD	365	34.77	10.50	42.28	10.98	20	1000
120cells mono 120 片单晶	EG-300M60-HDV	300	32.12	9.34	39.76	9.81	20	1500
	EG-305M60-HDV	305	32.35	9.43	39.98	9.90	20	1500
	EG-310M60-HDV	310	32.57	9.52	40.20	9.99	20	1500
	EG-315M60-HDV	315	32.78	9.61	40.42	10.08	20	1500
	EG-320M60-HDV	320	32.99	9.70	40.63	10.17	20	1500
	EG-325M60-HDV	325	33.20	9.79	40.74	10.26	20	1500
	EG-330M60-HDV	330	33.41	9.88	40.94	10.35	20	1500
	EG-335M60-HDV	335	33.61	9.97	41.14	10.44	20	1500
	EG-340M60-HDV	340	33.80	10.06	41.35	10.53	20	1500
	EG-345M60-HDV	345	34.00	10.15	41.54	10.63	20	1500
	EG-350M60-HDV	350	34.18	10.24	41.72	10.72	20	1500
	EG-355M60-HDV	355	34.37	10.33	41.90	10.81	20	1500
	EG-360M60-HDV	360	34.55	10.42	42.08	10.90	20	1500
	EG-365M60-HDV	365	34.77	10.50	42.28	10.98	20	1500

Type of cells 电池类别	Type of Module 组件型号	Maximum power Pmax (W)	Operating Voltage Vmp (V)	Operating Current Imp (A)	Open Circuit Voltage Voc (V)	Short Circuit Current Isc (A)	Max.Series Fuse Rating(A)	system voltage (V)
132cells mono 132 片单晶	EG-355M66-HD	355	36.30	9.78	44.62	10.26	20	1000
	EG-360M66-HD	360	36.52	9.86	44.83	10.34	20	1000
	EG-365M66-HD	365	36.73	9.94	45.04	10.42	20	1000
	EG-370M66-HD	370	36.93	10.02	45.24	10.50	20	1000
	EG-375M66-HD	375	37.13	10.10	45.44	10.58	20	1000
	EG-380M66-HD	380	37.33	10.18	45.64	10.66	20	1000
	EG-385M66-HD	385	37.53	10.26	45.84	10.73	20	1000
	EG-390M66-HD	390	37.72	10.34	46.03	10.82	20	1000
	EG-395M66-HD	395	37.91	10.42	46.22	10.90	20	1000
	EG-400M66-HD	400	38.10	10.50	46.41	10.97	20	1000
132cells mono 132 片单晶	EG-355M66-HDV	355	36.30	9.78	44.62	10.26	20	1500
	EG-360M66-HDV	360	36.52	9.86	44.83	10.34	20	1500
	EG-365M66-HDV	365	36.73	9.94	45.04	10.42	20	1500
	EG-370M66-HDV	370	36.93	10.02	45.24	10.50	20	1500
	EG-375M66-HDV	375	37.13	10.10	45.44	10.58	20	1500
	EG-380M66-HDV	380	37.33	10.18	45.64	10.66	20	1500
	EG-385M66-HDV	385	37.53	10.26	45.84	10.73	20	1500
	EG-390M66-HDV	390	37.72	10.34	46.03	10.82	20	1500
	EG-395M66-HDV	395	37.91	10.42	46.22	10.90	20	1500
	EG-400M66-HDV	400	38.10	10.50	46.41	10.97	20	1500

Type of cells 电池类别	Type of Module 组件型号	Maximum power Pmax (W)	Operating Voltage Vmp (V)	Operating Current Imp (A)	Open Circuit Voltage Voc (V)	Short Circuit Current Isc (A)	Max.Series Fuse Rating(A)	system voltage (V)
156 cells mono 156 片单晶	EG-420M78-HD	42.34	9.92	420	52.02	10.25	20	1000
	EG-425M78-HD	42.63	9.97	425	52.31	10.30	20	1000
	EG-430M78-HD	42.92	10.02	430	52.60	10.35	20	1000
	EG-435M78-HD	43.20	10.07	435	52.89	10.40	20	1000
	EG-440M78-HD	43.48	10.12	440	53.17	10.45	20	1000
	EG-445M78-HD	43.76	10.17	445	53.45	10.50	20	1000
	EG-450M78-HD	44.04	10.22	450	53.73	10.55	20	1000
	EG-455M78-HD	44.31	10.27	455	54.00	10.60	20	1000
	EG-460M78-HD	44.58	10.32	460	54.27	10.65	20	1000
	EG-465M78-HD	44.85	10.37	465	54.54	10.70	20	1000
	EG-470M78-HD	45.11	10.42	470	54.80	10.75	20	1000
156 cells mono 156 片单晶	EG-420M78-HDV	42.34	9.92	420	52.02	10.25	20	1500
	EG-425M78-HDV	42.63	9.97	425	52.31	10.30	20	1500
	EG-430M78-HDV	42.92	10.02	430	52.60	10.35	20	1500
	EG-435M78-HDV	43.20	10.07	435	52.89	10.40	20	1500
	EG-440M78-HDV	43.48	10.12	440	53.17	10.45	20	1500
	EG-445M78-HDV	43.76	10.17	445	53.45	10.50	20	1500
	EG-450M78-HDV	44.04	10.22	450	53.73	10.55	20	1500
	EG-455M78-HDV	44.31	10.27	455	54.00	10.60	20	1500
	EG-460M78-HDV	44.58	10.32	460	54.27	10.65	20	1500
	EG-465M78-HDV	44.85	10.37	465	54.54	10.70	20	1500
	EG-470M78-HDV	45.11	10.42	470	54.80	10.75	20	1500